KD-17

Multimedia Enhanced

KitchenAid®

TECHNICAL EDUCATION

2015 Microfiltration Dishwashers with Advanced ProDry™

KDTM354E†, KDTM384ESS, KDTM404E*,

KDTM504EPA, KMTM704E*, KDTM804SS

†BL-Black, SS-Stainless Steel, WH-White
*BL-Black, SS-Stainless Steel, WH-White, BS-Black Stainless

JOB AID W10787848A

FORWARD

This KitchenAid Job Aid, "2015 Microfiltration Dishwashers with Advanced ProDry™" (Part No. W10787848A), provides the In-Home Service Professional with information on the installation, operation, and service of the “Microfiltration Dishwasher." For specific operating information on the model being serviced, refer to the “Use and Care Guide” provided with the dishwasher.

GOALS AND OBJECTIVES

The goal of this Job Aid is to provide information that will enable the In-Home Service Professional to properly diagnose malfunctions and repair the KitchenAid 2015 Microfiltration Dishwasher with Advanced ProDry™.

The objectives of this Job Aid are to:

- Understand and follow proper safety precautions.
- Successfully troubleshoot and diagnose malfunctions.
- Successfully perform necessary repairs.
- Successfully return the dishwasher to its proper operational status.

WHIRLPOOL CORPORATION assumes no responsibility for any repairs made on our products by anyone other than authorized In-Home Service Professionals.

Copyright © 2015, Whirlpool Corporation, Benton Harbor, MI 49022

TABLE OF CONTENTS

KitchenAid 2015 Microfiltration Dishwashers with Advanced ProDry™

SECTION 1 — GENERAL INFORMATION

DISHWASHER SAFETY 1-2
GENERAL THEORY OF OPERATION 1-3
NEW COMPONENTS 1-4
MODEL & SERIAL NUMBER LABEL 1-6
TECH SHEET LOCATION 1-6
MODEL & SERIAL NUMBER NOMENCLATURE 1-7
DISHWASHER SPECIFICATIONS 1-8
PARTS & FEATURES 1-9
NOTES 1-10

SECTION 2 — OPERATION

START-UP / QUICK REFERENCE 2-2
QUICK STEPS 2-3
DISHWASHER USE 2-3
CYCLE & OPTION DESCRIPTIONS 2-5
DISHWASHER FEEDBACK SECTION 2-8
DISHWASHER FEATURES 2-9
DISHWASHER CARE 2-11
CONSUMER TROUBLESHOOTING GUIDE 2-13
NOTES 2-16

SECTION 3 — INSTALLATION

DISHWASHER SAFETY 3-2
INSTALLATION REQUIREMENTS 3-3
LOCATION REQUIREMENTS 3-4
DRAIN REQUIREMENTS 3-6
ELECTRICAL REQUIREMENTS 3-6
INSTALLATION INSTRUCTIONS 3-7
DETERMINE CABINET OPENING 3-14
INSTALL DOOR HANDLE 3-15
CHOOSE ATTACHMENT OPTION 3-16
PREPARE WATER SUPPLY LINE 3-17
CONNECT WATER SUPPLY 3-19
CONNECT TO DRAIN 3-19
MAKE DIRECT WIRE ELECTRICAL CONNECTION 3-20
SECURE DISHWASHER TO CABINET OPENING 3-22
COMPLETE INSTALLATION 3-23

SECTION 4 — COMPONENT ACCESS (MULTIMEDIA ENHANCED)

Video Available *Look for this ICON throughout Section 4*

INSULATION BLANKET 4-2
DOOR LATCH STRIKE 4-2
ADJUSTABLE DOOR SPRINGS 4-3
WATER INLET & DRAIN HOSE 4-3
ADVANCED PRODRY™ (SIDE DRY) 4-4
OVERFILL ASSEMBLY 4-5

INTERIOR LED LIGHTING 4-6
ACCESSING DOOR COMPONENTS 4-7
REMOVING USER INTERFACE 4-8
REMOVING LATCH ASSEMBLY 4-9
REMOVING DISPENSER ASSEMBLY 4-10
IN TUB COMPONENTS 4-11
SPRAY ARMS, FEED TUBE, AND MANIFOLD 4-12
REMOVING THE RACKS 4-13
REMOVING LOWER SPRAY ARM 4-14
REMOVING PROSCRUB® MANIFOLD & FEED TUBE 4-15
REMOVING DIVERTER DISK 4-16
UNDER TUB COMPONENTS 4-18
REMOVING ELECTRONIC CONTROL 4-19
REMOVING HEATER ASSEMBLY 4-20
REMOVING DRAIN PUMP & SUMP ASSEMBLY 4-21
REMOVING OPTICAL WATER INDICATOR 4-24
REMOVING DIVERTER ASSEMBLY 4-25
MICROFILTRATION WASH SYSTEM PARTS 4-26
REMOVING WASH MOTOR & ROTATING INLET FILTER 4-27
ROTATING INLET FILTER PARTS 4-30

SECTION 5 — DIAGNOSTICS & TROUBLESHOOTING

DIAGNOSTIC & TROUBLESHOOTING WARNINGS 5-1
SERVICE DIAGNOSTIC CYCLE 5-3
SERVICE DIAGNOSTIC CYCLE NOTES 5-4
CUSTOMER CYCLE OPERATION 5-4
SERVICE DIAGNOSTICS WITH ERROR CODES 5-5
SERVICE ERROR CODES 5-6
TROUBLESHOOTING GUIDE 5-11

SECTION 6 — TESTING

TESTING WARNINGS 6-2
WIRING DIAGRAM 6-3
CONTROL BOARD INFORMATION 6-4
FUSE SERVICE & RESISTANCE CHECKS 6-4
COMPONENT TESTING 6-4
ELECTRONIC CONTROL BOARD 6-5
METER CHECK OF LOADS & SUPPLIES 6-5
GENERAL THEORY OF OPERATION 6-6
POWER CHECK 6-6
DOOR SWITCH CIRCUIT 6-7
FILL CIRCUIT 6-8
DISPENSER CIRCUIT 6-9
WATER HEATING / HEAT DRY 6-10
WATER SENSING WITH OWI SENSOR 6-11
DIVERTER MOTOR 6-12
DIVERTER SENSOR / POSITION SWITCH 6-13
WASH MOTOR 6-14
DRAIN MOTOR 6-15
LOWER SPRAY ARM MOTOR 6-16
AC FAN MOTOR 6-17
INTERIOR LED LIGHTING 6-18
USER INTERFACE (UI) 6-19
NOTES 6-20

PRODUCT SPECIFICATIONS & WARRANTY INFORMATION SOURCES (inside back cover)

Section 1: General Information

This section provides general safety, parts, and information for the "KitchenAid 2015 Microfiltration Dishwashers."

- Dishwasher Safety
- General Theory of Operation
- New Components
- Model & Serial Number Label
- Tech Sheet Location
- Model & Serial Number Nomenclature
- Dishwasher Specifications
- Parts & Features
- Notes

Dishwasher Safety

Your safety and the safety of others are very important.

We have provided many important safety messages in this manual and on your appliance. Always read and obey all safety messages.

This is the safety alert symbol.

This symbol alerts you to potential hazards that can kill or hurt you and others.

All safety messages will follow the safety alert symbol and either the word “DANGER” or “WARNING.” These words mean:

DANGER — **You can be killed or seriously injured if you don't immediately follow instructions.**

WARNING — **You can be killed or seriously injured if you don't follow instructions.**

All safety messages will tell you what the potential hazard is, tell you how to reduce the chance of injury, and tell you what can happen if the instructions are not followed.

General Theory of Operation

2015 KitchenAid Microfiltration Wash System

No Filter Cup, No Chopper

The industry's first microfiltration system is a clear departure from traditional, passive filtration because it continuously filters 100% of the water, reducing the cycle time and energy consumption on the heaviest loads.

Similar on the Surface, Radically Different Inside

The only visible filtration component of the new filtration system is the coarse filter in the bottom of the tub. The rest of the high-performance filtration system is below the tub.

How Microfiltration Works (See Figure 1)

1. Water and food particles flow through the coarse filter (A) into the filter housing.
2. An impeller pulls wash and rinse water into the spinning ultra-fine filter (B).
3. The ultra-fine filter is cleaned by an area of back-pressure (C) created by two sets of wing-shaped blades located inside (D) and outside (E) the filter.
4. Food particles remain suspended inside the filter housing; filtered water is pumped back to the wash arms.
5. During draining, a secondary pump flushes out food particles and soils.

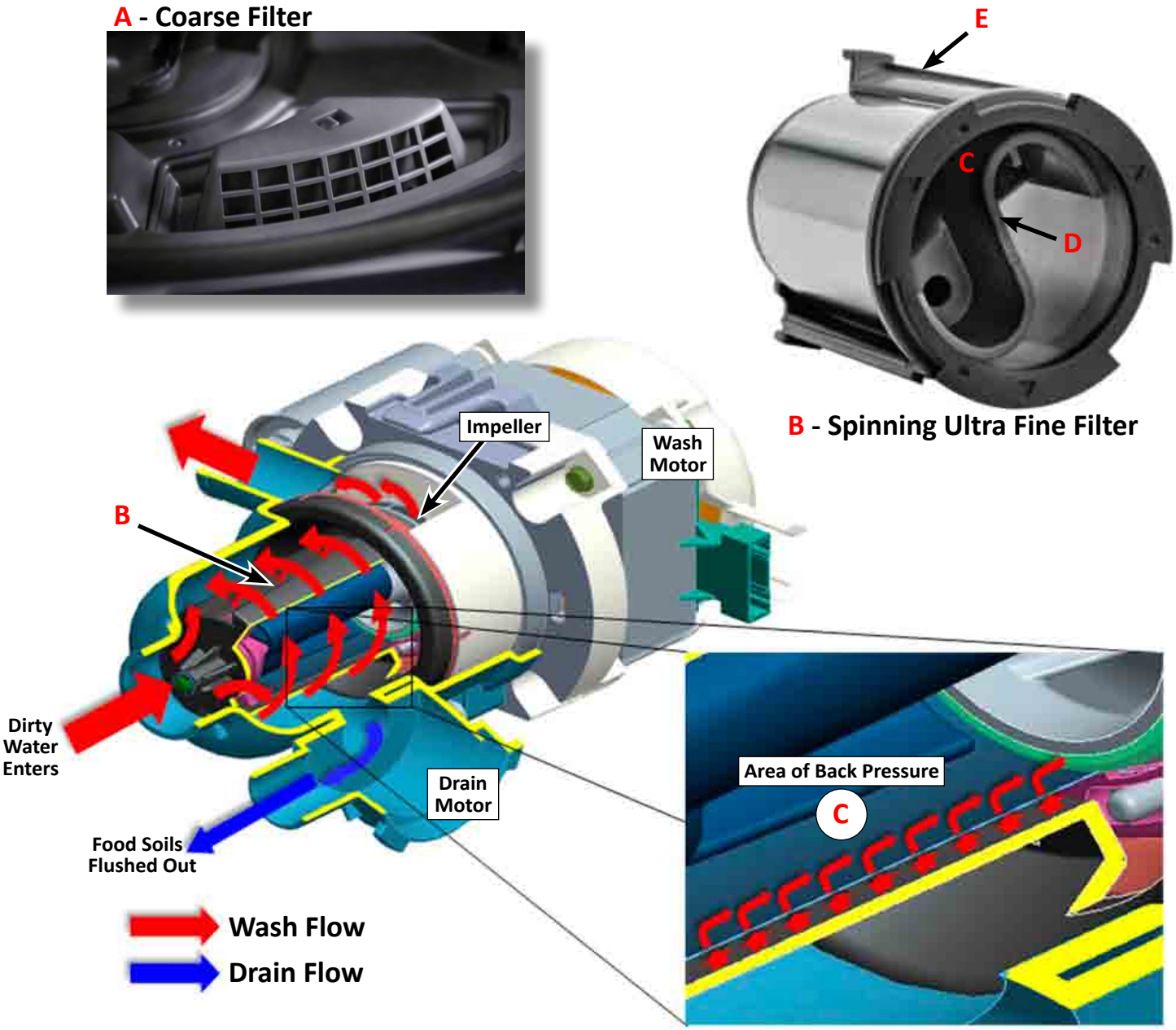

Figure 1 - Microfiltration Wash System

New Components

Advanced ProDry™ (Side Dry)

The Advanced ProDry Option uses a heating element, plus a system of vents and a fan on the side of the tub to ensure effective drying for all items.

1. Humid air is drawn into a side vent by a fan.
2. Dry air mixes with humid air to improve drying performance.
3. Air is exhausted into the kitchen through bottom front vent.

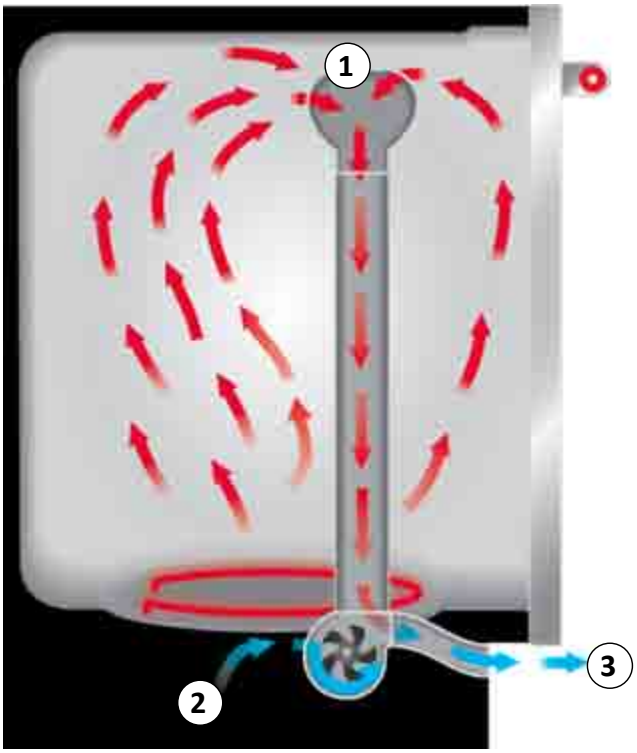

Figure 2 - Advanced ProDry™

Dynamic Wash Arm

Nine arms provide complete water coverage to get every dish clean no matter the placement on the rack. The unique nozzle spacing directly sprays even hard-to-reach places to get every dish clean.

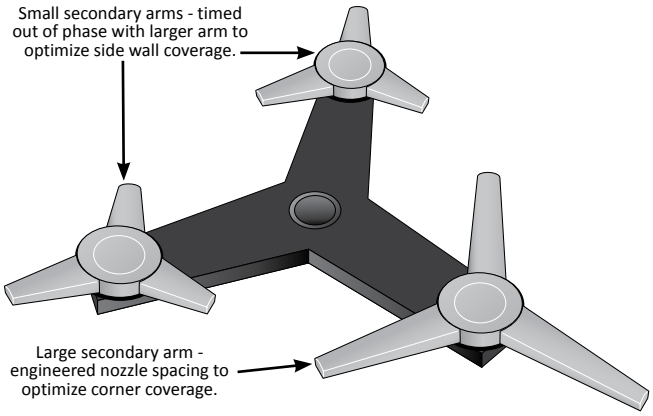

Figure 3 - Dynamic Wash Arm

ProScrub® Trio Bottlewash

The ProScrub® option helps eliminate soaking and pre-scrubbing by using a system of 40 jets to create a powerful, targeted wash zone on the upper dishwasher rack. These jets power away tough baked- and caked-on foods.

Three articulating nozzles on each side. (See Figure 4)

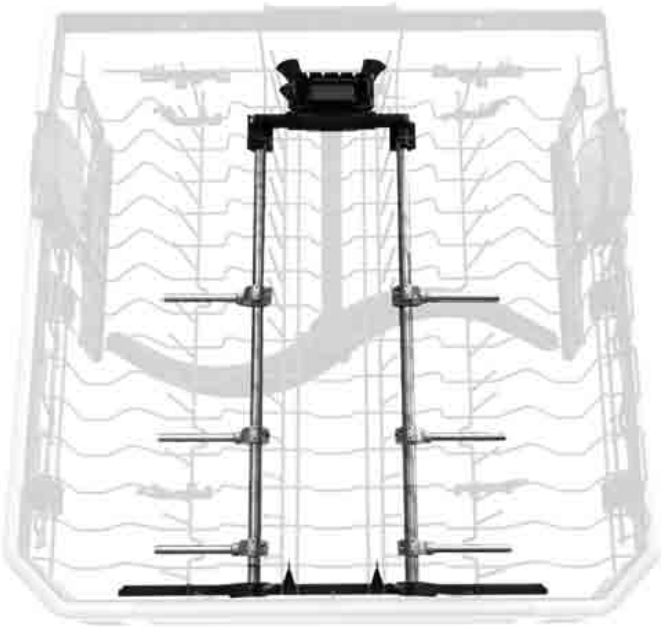

Figure 4 - ProScrub® Trio

A: When the nozzle is in the horizontal position, water sprays from the base.

B: When the nozzle is rotated upwards, water sprays from top of the nozzle.

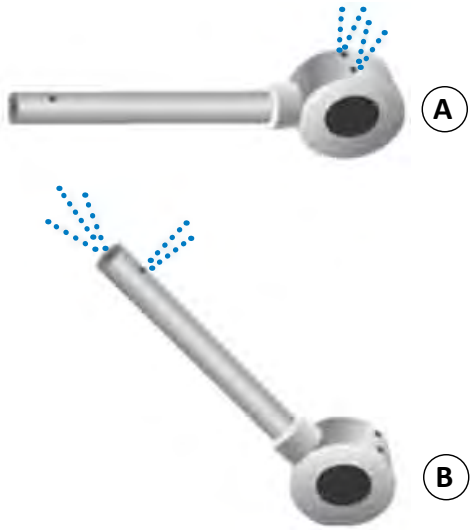

Figure 5 - Bottlewash Nozzles

New Components (continued)

SatinGlide® Max Upper / Lower Racks

SatinGlide® Max Upper Rack Guides (all models), provide 52 ball bearings in each rail to create a smooth, premium feel. Rack guides are designed not to bind or jam, even when fully-loaded.

Figure 6 - SatinGlide® Upper Rack

SatinGlide® Max Lower Rack Guides (select models only) glide along the door to provide extra support.

Figure 7 - SatinGlide® Lower Rack

Window in Door with Lighted Interior

Dishwasher with a chrome inlaid framed Window with Lighted Interior so you can inspect dishes before removing them.

Figure 8 - Window in Door

Figure 9 - Lighted Interior

Model & Serial Number Label

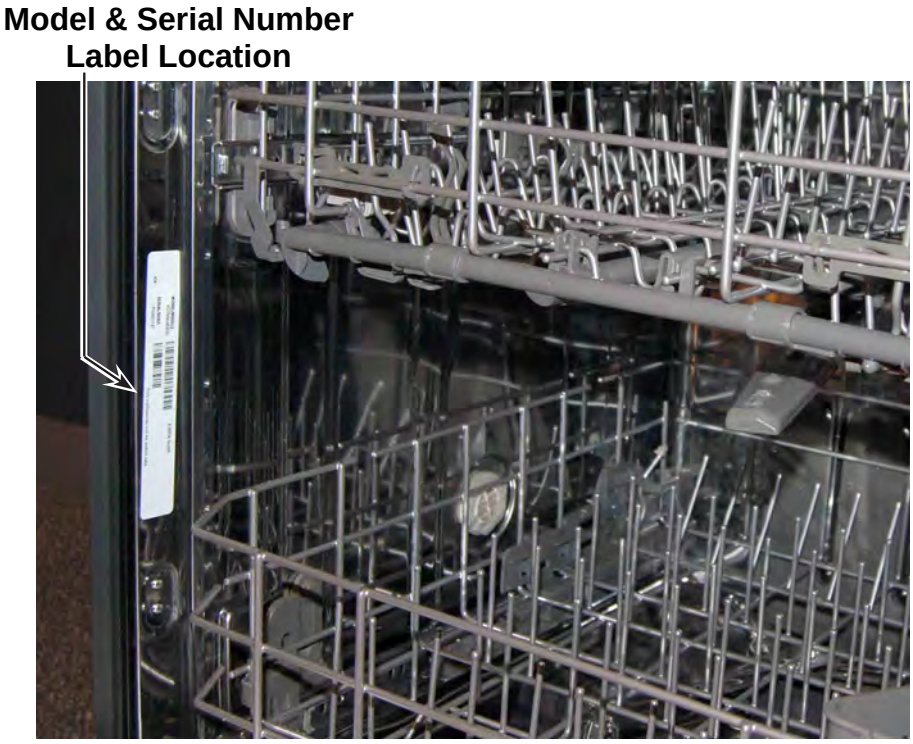

Figure 10 - Model/Serial Number Label located inside, on left side wall, toward front.

Tech Sheet Location

Figure 11 - Tech Sheet located behind toe panel inside insulation folds.

Model & Serial Number Nomenclature

MODEL NUMBER K D T M 704 E SS 0

INTERNATIONAL SALES OR MARKETING CHANNEL

K = KITCHENAID BRAND

PRODUCT IDENTIFIER
D = Dishwasher

T = Top Mounted UI

M = Microfiltration (RIF)

SERIES CONFIGURATION
Product Features / Model Configuration

YEAR OF MODEL INTRODUCTION
E = 2015

COLOR CODE
WH = White SS = Stainless Steel BL = Black
BS = Black Stainless PA = Panel Ready

ENGINEERING CHANGE
0 = Basic Release; 1 = First Revision; 2 = Second Revision

SERIAL NUMBER F 5 25 10000

MANUFACTURING SITE
F = FINDLAY, OH

YEAR OF MANUFACTURE
5 = 2015

WEEK OF MANUFACTURE

PRODUCT SEQUENCE NUMBER

Dishwasher Specifications

Line Voltage/Frequency :	120 VAC/60 Hz
Amps :	10A
Low Volts Power Supply :	-5 VDC (REF), 13 VDC (+8V, -5V), Neutral (VCC)
Supply Water Flow Rate :	To fill 2 qt (1.9 L) in 27 seconds, 120 psi maximum, 20 psi minimum
Supply Water Temperature :	Minimum - 120° F (49° C)
Water Charge :	1.0 gal. (3.9 L) Approximate
Control :	Electronic Control
Wash Motor :	120 VAC, Run Winding (3-7 Ω), Aux Winding (6-10 Ω)
Drain Motor :	120 VAC (15-25 Ω)
Fill Valve :	120 VAC, (890-1,090 Ω)
Heater :	120 VAC, (8-30 Ω)
Dispenser :	Solenoid: 120 VAC, (260-300 Ω) Wax Motor: 120 VAC, (1.4K-2.8K Ω)
Diverter Valve Motor :	120 VAC, (1300-1600 Ω)
Spray Arm Motor :	120 VAC, (1,890-2,310 Ω each coil) (some models)
Vent Wax Motor :	120 VAC, (600-1,800 Ω)
Fan Motor :	5 VDC, (31K-41K Ω)
Interior Lighting :	LEDs (13 VDC) (some models)
Sensors :	NTC Thermistor Water Sensor (OWI) Spray Arm Sensor (some models)
Switches :	Diverter Position Switch (5 VDC) Door Switch (13 VDC) Float Switch (120 VAC)
TCO / Bi-Metal :	Incorporated into Control Board (Penninsula Slots)
Fuse :	F9 = Small Triac Load Fuse
Wash System :	Clean Water Wash System (RIF)
Lower Spray Arm Rotation :	12 to 40 rpm
Upper Spray Arm Rotation :	12 to 30 rpm
Filtration :	Rotating Inlet Filter (Microfiltration)
Advanced ProDry™ :	Available on all models
ProScrub™ :	Available on all models
Dynamic Wash Arm :	Available on certain models
Window with Lighted Interior :	Available on certain models
Bottle Wash :	Available on certain models
Depth :	24 3/4” (62.86 cm) without handles, 27 1/2” (69.85 cm) with handles
Height :	34 1/2” (87.63 cm) max., 33 1/2 (85.09 cm) min.
Width :	23 7/8” (60.64 cm)
Weight :	102 lbs. (46.27 kg)

Parts & Features

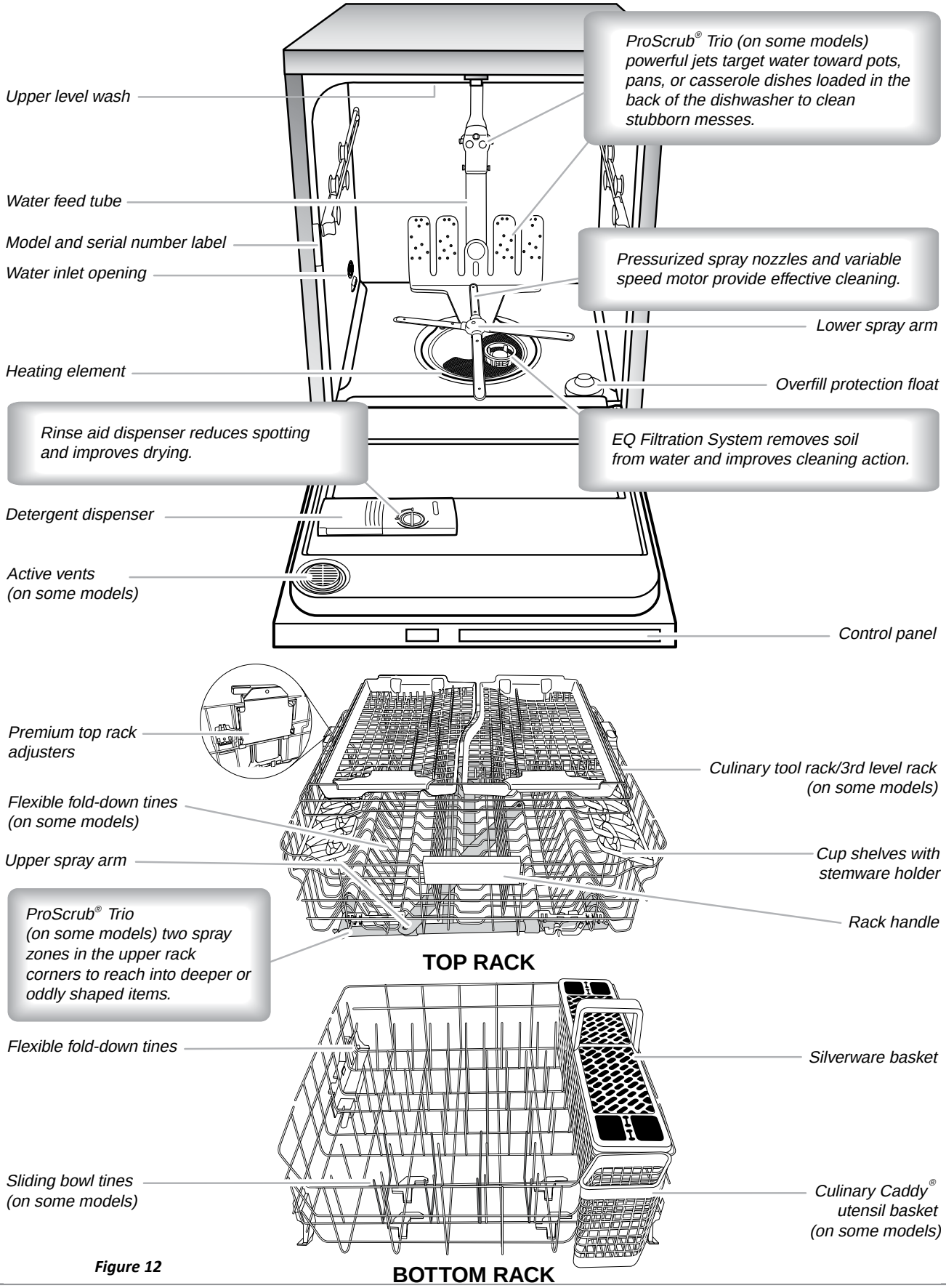

Figure 12

Notes

Section 2: Operation

This section provides operational use and care information for the “KitchenAid 2015 Microfiltration Dishwashers.”

- Start-Up / Quick Reference
- Quick Steps
- Dishwasher Use
- Cycle and Option Descriptions
- Dishwasher Feedback Section
- Dishwasher Features
- Dishwasher Care
- Consumer Troubleshooting Guide
- Notes

Start-Up / Quick Reference (varies by model)

Clean EQ Wash System removable filters to maintain peak performance.

Cleaning the filters periodically helps keep the dishwasher working at peak performance. The filters can be found at the bottom center of your dishwasher.

See the “Filtration System” section for information on removing and maintaining the filters.

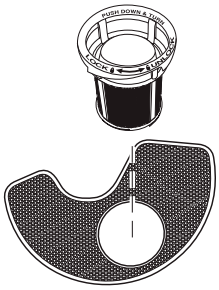

IMPORTANT: Do not block detergent dispenser.

Tall items placed in the lower rack may block the dispenser door. Cookie sheets and cutting boards loaded on the left-hand side of the dishwasher can easily block the dispenser. If detergent is inside of the dispenser or on the bottom of the tub after the cycle is complete, the dispenser was blocked.

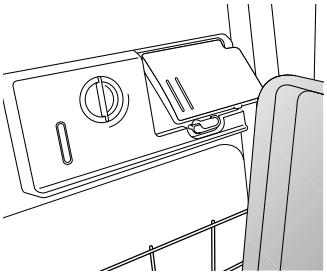

Drying - Rinse Aid is essential.

You must use a drying agent such as a rinse aid for good drying performance (sample included). Rinse aid along with the Heat Dry or ProDry™ option will provide best drying and avoid excessive moisture in the dishwasher interior.

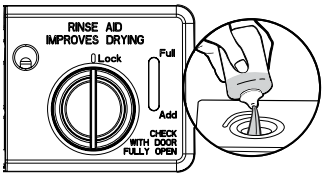

Heat Dry **or** ProDry

Express Wash - When you need fast results.

Efficient dishwashers run longer to save water and energy, just as driving a car slower saves on gas. When you need fast results, the Express Wash will clean your dishes using slightly more water and energy. Select the Heat Dry or ProDry™ option to speed drying times (adds approximately 27 to 35 minutes to the Express Wash cycle).

Express Wash

ProWash™ cycle for optimal cleaning

The most advanced and versatile cycle. ProWash™ cycle senses the load size, soil amount, and toughness of soil, to adjust the cycle for optimal cleaning using only the amount of water and energy needed. The ProWash™ and Tough cycles are recommended for tough soil. No need to prerinse dishes; just scrape and load.

ProWash

Soil - Sense

ProScrub® Option to clean baked-on food (some models)

When the ProScrub® option is selected, it provides a concentrated wash on the back of the lower dish rack for hard-to-clean dishes. Place these dishes with the soiled surface of the dish toward the ProScrub® spray jets in the lower rack of the dishwasher.

The upper rack has two spray zones in the front corners to reach into deeper or oddly shaped items.

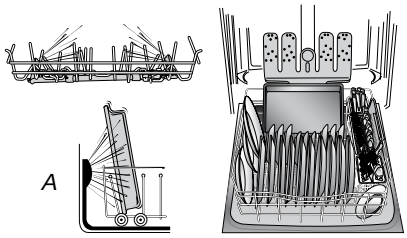

A. Back of dishwasher

Press START/RESUME every time you add a dish.

IMPORTANT: If anyone opens the door (such as, for adding a dish, even during the Delay Hours option), the Start/Resume button must be pressed each time.

If the Start/Resume button is located on top of door: Push door firmly closed within 3 seconds of pressing START/RESUME. If the door is not closed within 3 seconds, the Start/Resume button LED will flash, an audible tone will be heard, and the cycle will not start.

Start
RESUME

Repeat Last Cycle

Proper Detergent Dosing

It is possible to use too much detergent in your dishwasher. This can lead to etching of your dishes. See “Add Detergent” and “Add Rinse Aid” in the “Dishwasher Use” section, to determine the amount of detergent needed based on your water hardness.

Quick Steps

1 Prepare and load dishwasher.

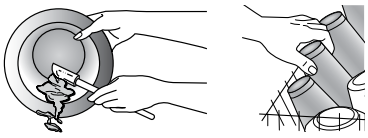

2 Add detergent for cleaning and rinse aid for drying.

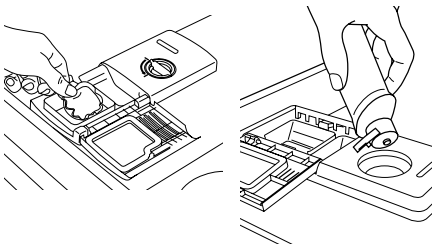

3 Select a cycle and option.

SOIL CYCLES | SPEED CYCLES

ProWash (Soil - Sense) | Tough | Normal | Light | Express Wash | Rinse Only

OPTIONS

Heat Dry | Hi-Temp Wash (Sound On/Off Hold 3 Sec) | Sani Rinse | 4 Hour Delay | Control Lock (Hold 3 Sec)

or

OPTIONS

ProDry | ProScrub | Hi-Temp Wash (*Sound On/Off Hold 3 Sec*) | Sani Rinse | Top Rack Only | 4 Hour Delay (*Control Lock Hold 3 Sec*)

4 Start dishwasher.

NOTE: If the Start/Resume button is located on the top of door, push door firmly closed within 3 seconds of pressing START/RESUME.

Start
RESUME

Repeat Last Cycle

Dishwasher Use

STEP 1

Prepare and Load the Dishwasher

IMPORTANT: Remove leftover food, bones, toothpicks and other hard items from the dishes. Remove labels from containers before washing.

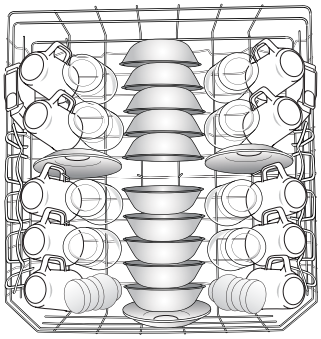

10 place load - upper rack

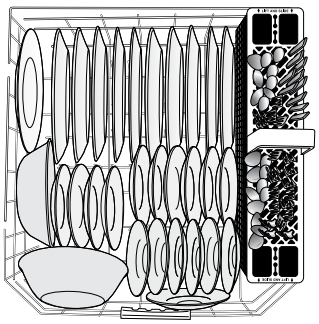

10 place load - lower rack

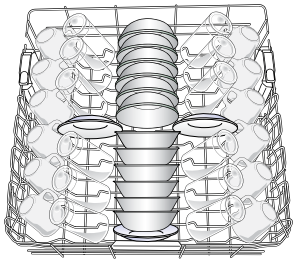

12 place load - upper rack

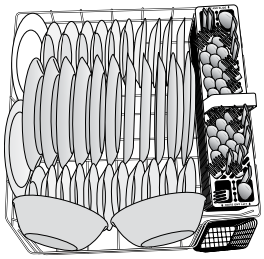

12 place load - lower rack

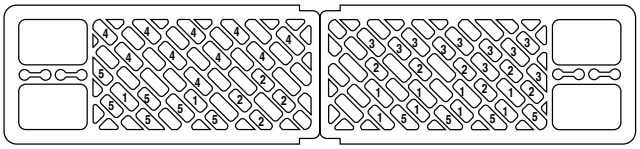

10 place load - silverware basket

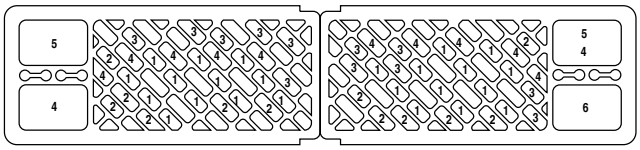

12 place load - silverware basket

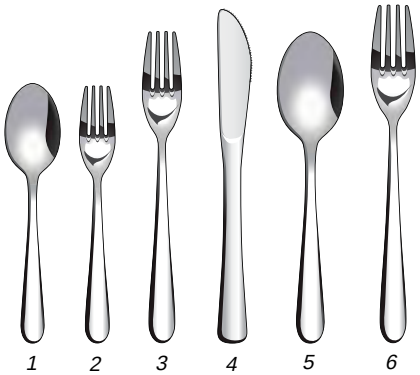

1. *Teaspoon*
2. *Salad fork*
3. *Dinner fork*
4. *Knife*
5. *Tablespoon/large serving spoon*
6. *Large serving fork*

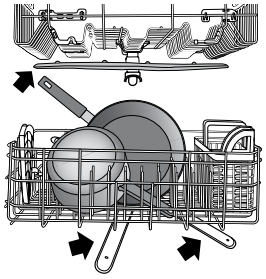

- Make sure nothing keeps spray arm(s) from spinning freely. It is important for the water spray to reach all soiled surfaces.
- Make sure that when the dishwasher door is closed no items are blocking the detergent dispenser.
- Items should be loaded with soiled surfaces facing down and inward to the spray as shown. This will improve cleaning and drying results.
- Avoid overlapping items like bowls or plates that may trap food.
- Place plastics, small plates and glasses in the upper rack. Wash only plastic items marked “dishwasher safe.”
- To avoid thumping/clattering noises during operation, load dishes so they do not touch one another. Make sure lightweight load items are secured in the racks.
- Improper loading can cause dishes to be chipped or damaged. When loading glasses or mugs, it is best to load these items in between rows of tines instead of loading them over tines, as shown.
- When loading silverware, always place sharp items pointing down. Mix items in each section of the basket with some pointing up and some down to avoid nesting. Spray cannot reach nested items.

STEP 2

Add Detergent

NOTE: If you do not plan to run a wash cycle soon, run a rinse cycle. Do not use detergent.

- Use automatic dishwasher detergent only. Add powder, liquid or tablet detergent just before starting a cycle.
- Fresh automatic dishwasher detergent results in better cleaning. Store tightly closed detergent container in a cool, dry place.

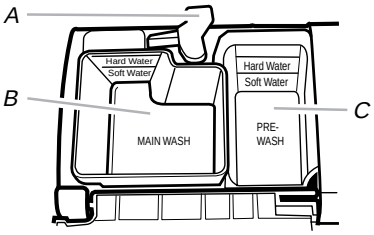

A. Cover latch
B. Main Wash section
C. Pre-Wash section

- The amount of detergent to use depends on:

  How much soil remains on the items - Heavily soiled loads require more detergent.

  The hardness of the water - If you use too little in hard water, dishes won't be clean. If you use too much in soft water, glassware will etch.

  Soft to Medium Water (0-6 grains per U.S. gallon) [typical water softener water and some city water]

  Medium to Hard Water (7-12 grains per U.S. gallon) [well water and some city water]
- Depending on your water hardness, fill the Main Wash section of the dispenser as shown. Fill the Pre-Wash section to the level shown, if needed.

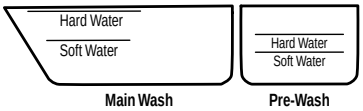

NOTE: Fill amounts shown are for standard powdered detergent. Follow instructions on the package when using other dishwasher detergent types. Premeasured forms are suitable for all hardness and soil levels. Always place premeasured detergents in the main compartment and close the lid.

Add Rinse Aid

- Your dishwasher is designed to use rinse aid for good drying performance. Without rinse aid your dishes and dishwasher interior will have excessive moisture. The heat dry option will not perform as well without rinse aid.
- Rinse aid keeps water from forming droplets that can dry as spots or streaks. They also improve drying by allowing water to drain off of the dishes after the final rinse.
- Rinse aid helps to reduce excess moisture on the dish racks and interior of your dishwasher.

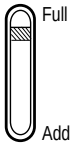

- Check the rinse aid indicator. Add rinse aid when indicator drops to “Add” level.
- To add rinse aid, turn the dispenser cap to “Refill” and lift off. Pour rinse aid into the opening until the indicator level is at “Full.” Replace the dispenser cap and turn to “Lock.” Make sure cap is fully locked.

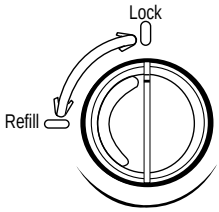

¼ turn to lock

NOTE: For most water conditions, the factory setting of 2 will give good results. If you have hard water or notice rings or spots, try a higher setting. Turn the arrow adjuster inside the dispenser by either using your fingers or inserting a flat-blade screwdriver into the center of the arrow and turning.

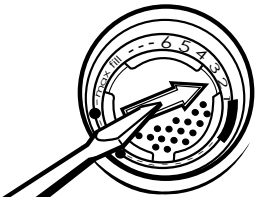

STEP 3

Select a Cycle (cycles vary by model)

See “Cycle and Option Descriptions” charts in the following section.

Efficient dishwashers run longer to save water and energy, just as driving a car slower saves on gas. Typical cycle time is approximately 2½ hours, but can take less or more time to complete depending on selections.

Select Options (options vary by model)

See “Cycle and Option Descriptions” charts in the following section.

You can customize your cycles by pressing the options desired. If you change your mind, press the option again to turn off the option. Not all options are available for every cycle. If an invalid option is selected for a given cycle, the lights will flash.

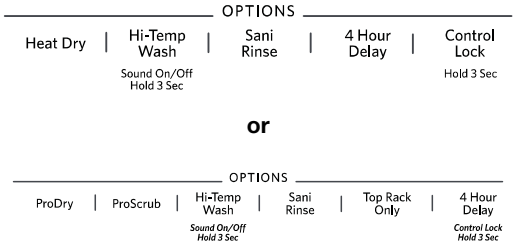

STEP 4

Start or Resume a Cycle

- Run hot water at the sink nearest your dishwasher until the water is hot. Turn off water.
- Press START/RESUME once to show which selections you used. Select the wash cycle and options desired OR press START/RESUME to repeat the same cycle and options as in the previous wash cycle.

IMPORTANT: If anyone opens the door (such as, for adding a dish, even during the Delay Hours option), the Start/Resume button must be pressed each time.

- If the Start/Resume button is located on top of door, push door firmly closed within 3 seconds of pressing START/RESUME. If the door is not closed within 3 seconds, the Start/Resume button LED will flash, an audible tone will be heard, and the cycle will not start.

Cycle and Option Descriptions

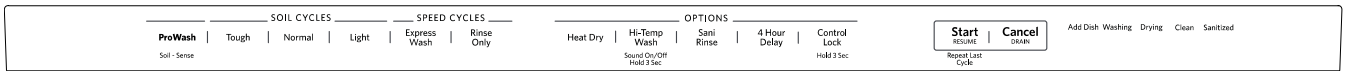

This information covers several different models. Your dishwasher may not have all of the cycles and options described.

CYCLE SELECTIONS

CYCLES		SOIL LEVEL	WASH TIME* (MINS.) W/O OPTIONS Typical**	Max	WATER USAGE GALLONS (Liters)
ProWash Soil - Sense	The most advanced and versatile cycle. ProWash™ cycle senses the load size, soil amount, and toughness of soil, to adjust the cycle for optimal cleaning using only the amount of water and energy needed.	Light to Medium	110	150	3.8 (14.5)
		Tough/Baked-On	125	190	5.0 (19.1)
		Heavy	125	190	7.7 (29.0)
Tough	Use for hard-to-clean, heavily soiled pots, pans, casseroles, and tableware.	Heavy/Baked-On	140	205	7.9 (30.0)
Normal	This cycle is recommended to completely wash a full load of normally soiled dishes. Selecting this cycle will default to the options recommended for normal amounts of food soil. The energy label is based on this cycle.	Light	110	150	2.8 (10.5)
		Medium	110	150	4.0 (15.0)
		Heavy	125	190	7.9 (30.0)
Light	Use for lightly soiled items or china and crystal.	Light to Medium	105	145	4.2 (15.2)
		Heavy/Baked-On	120	185	7.7 (29.0)

CYCLE SELECTIONS

CYCLES		SOIL LEVEL	WASH TIME* (MINS.) W/O OPTIONS		WATER USAGE GALLONS (Liters)
			Typical**	Max	
Express Wash	When you need fast results, the Express Wash will clean dishes using slightly more water and energy. Select the Heat Dry or ProDry™ option to speed drying times.	All soil levels	58	64	6.2 (23.5)
Rinse Only	Use for rinsing dishes, glasses, and silverware that will not be washed right away. Do not use detergent.	All soil levels	17	20	2.4 (9.0)

Wash times depend on water temperature, heavy soil condition, dish load size and options selected. Adding options will add time to the cycle.

*Adding options will add time to the cycle. See options information section.

**This is the approximate cycle time obtained with 120°F (49°C) hot water available at the dishwasher. Increase in time results from low temperature of the incoming water.

OPTION SELECTIONS

OPTIONS		CAN BE SELECTED WITH	WHAT IT DOES	ADDED TIME TO CYCLE		ADDED WATER GALLONS (LITERS)
				TYPICAL	MAX	
ProScrub	Lower jets clean pans, casseroles, etc., with tough food soil to eliminate the need for soaking and scrubbing of dirty, baked-on dishes. The upper rack has two spray zones in the front corners to reach into deeper or oddly shaped items.	Tough Normal ProWash™ Top Rack Only	Activates the ProScrub® spray jets to provide intensified cleaning power to specific wash areas.	**53**	**73**	**0 - 3.0** **(0 - 11.2)**
Hi-Temp Wash Sound On/Off Hold 3 Sec	Raises the main wash temperature to improve cleaning for loads containing tough, baked-on food.	Tough Normal	Raises the main wash temperate from 105°F (41°C) to either 130°F (55°C) or 140°F (60°C).	**42**	**60**	**0 - 3.0** **(0 - 11.2)**
Sani Rinse	Sanitizes dishes and glassware in accordance with NSF International NSF/ANSI Standard 184 for Residential Dishwashers. Certified residential dishwashers are not intended for licensed food establishments. The Sani indicator indicates at the end of the cycle whether the Sani Rinse option was successfully completed. If the indicator is not activated, it is probably due to the cycle being interrupted.	Tough Normal	Increases the main wash temperature from 105°F (41°C) to 130°F (54°C) and the final rinse from 140°F (60°C) to 155°F (68°C).	**53**	**73**	**0 - 3.0** **(0 - 11.2)**
Top Rack Only	For added convenience, use for washing a small load of dishes in the top rack to help keep the kitchen continuously clean.	Available with any cycle	Slightly faster wash for smaller loads	**-7**	**-30**	**0**

OPTION SELECTIONS

OPTIONS		CAN BE SELECTED WITH	WHAT IT DOES	ADDED TIME TO CYCLE		ADDED WATER GALLONS (LITERS)
				TYPICAL	MAX	
ProDry	Dries dishes with heat and a fan. This option with the use of rinse aid will provide the best drying performance. Plastic items are less likely to deform when loaded in the top rack. Turn ProDry™ option off for an air dry.	Available with any cycle except Rinse Only	Uses the heating element to heat air, plus a system of vents and a fan that ventilates moist air out of the dishwasher to speed drying times. ProDry™ option defaults to ON when any cycle is selected except for 1 Hour Wash.	**44**	**51**	**0**
Heat Dry	Dries dishes with heat. This option with the use of rinse aid will provide the best drying performance. Plastic items are less likely to deform when loaded in the top rack. Turn Heat Dry off for an air dry.	Available with any cycle except Rinse Only	Activates the heating element at the end of the wash cycle to speed drying times. Heat Dry defaults to ON when any cycle is selected except for 1 Hour Wash.	**52**	**52**	**0**
4 Hour Delay **or** 2-4-8 Hr. Delay	Runs the dishwasher at a later time or during off-peak electrical hours. Select a wash cycle and options. Press the Delay button. Press START/RESUME. Close the door firmly. **NOTE:** Anytime the door is opened (such as, to add a dish), the Start/Resume button must be pressed again to resume the delay countdown.	Available with any cycle	Delays the start of a cycle to the specified time.	**240**	**480**	**0**
Control Lock Hold 3 Sec **or** 4 Hour Delay *Control Lock Hold 3 Sec*	Avoids unintended use of the dishwasher between cycles, or cycle and option changes during a cycle. To turn on Lock, press and hold CONTROL LOCK or 4 HOUR DELAY (depending on model) for 3 seconds. The Control Lock light will stay on for a short time, indicating that it is activated, and all buttons are disabled. If you press any button while your dishwasher is locked, the light flashes 3 times. The dishwasher door can still be opened/closed while the controls are locked. **NOTE:** You may need to disable Sleep Mode by pressing either START/RESUME or CANCEL, or by opening and closing the door before you are able to turn Control Lock off. To turn off Control Lock, press and hold CONTROL LOCK or 4 HOUR DELAY (depending on model) for 3 seconds. The light turns off. **NOTE:** If your model requires you to press and hold 4 HOUR DELAY to lock the controls, the Control Lock LED will be on or off to indicate if Control Lock is active or not.						

CONTROLS AND CYCLE STATUS

CONTROL	PURPOSE	COMMENTS
Start RESUME Repeat Last Cycle	To start or resume a wash cycle	If the door is opened during a cycle or the power is interrupted, the Start/Resume indicator flashes. The cycle will not resume until the door is closed and START/RESUME is pressed. **NOTE:** If the Start/Resume button is located on top of door, push door firmly closed within 3 seconds of pressing START/RESUME. If the door is not closed within 3 seconds, the Start/Resume button LED will flash, an audible tone will be heard, and the cycle will not start.

CONTROLS AND CYCLE STATUS		
CONTROL	**PURPOSE**	**COMMENTS**
Cancel DRAIN	To reset any cycle or options during selection. To cancel a wash cycle after it's started.	Press and hold CANCEL/DRAIN to reset any control selections made. See “Canceling A Cycle” and “Changing A Cycle After Dishwasher Is Started” sections.
Hi-Temp Wash Sound On/Off Hold 3 Sec	To turn the audible tones on or off.	Press and hold the Hi-Temp Scrub button for 3 seconds to turn the audible tones on or off. Only audible tones for confirming button presses can be turned on/off. Important audible tones, such as indicating a cycle has been interrupted, cannot be deactivated.

Dishwasher Feedback Section

CONTROLS AND CYCLE STATUS		
CONTROL	**PURPOSE**	**COMMENTS**
Washing Drying Clean Sanitized or Add Dish Washing Drying Clean Sanitized or 2 Hr 4 Hr 8 Hr Clean Sanitized	The Cycle Status Indicator Lights are used to follow the progress of the dishwasher cycle. Located on the front of the dishwasher for front control models, and located on the top of the door for hidden control models.	Clean indicator glows when a cycle is finished. If you select the Sani Rinse option, when the Sani Rinse cycle is finished, the Sanitized indicator glows. If your dishwasher did not properly sanitize your dishes, the light flashes at the end of the cycle. This can happen if the cycle is interrupted, or the water could not be heated to the required temperature. The Clean and Sanitized lights go off when you open and close the door or press and hold CANCEL.
A	The Front Indicator Light or Single Exterior Light (A) shows progress of your dishwasher cycle by color (for hidden control models only).	The light will be blue if the dishwasher is washing or rinsing. The light will be red when the dishwasher is drying. The light will be white to indicate that the cycle is complete. If the Front Indicator Light is blinking, see “Troubleshooting” section.
Washing Rinsing Drying Clean Sanitized OK to Delay Add Dish Affresh	The Cycle Status Display is used to follow the progress of the dishwasher cycle, and to show other information. (Available on some models instead of Cycle Status Indicator Lights)	The indicators will inform you if you are able to add a dish to the cycle after it has started. It will also inform you if the dishwasher is washing, rinsing, drying, complete, and/or sanitized. They will show whether the control is locked and/or the delay option is selected. A series of bars will count down the duration of the cycle remaining from left to right. Each bar equals approximately 24 minutes of cycle length. The bars will also count down the delay feature from left to right, and the delay indicator will be activated. After every 30 cycles, the dishwasher will display “affresh,” providing a temporary reminder for you to perform a monthly maintenance procedure. See “Dishwasher Care” section.

Canceling a Cycle

1. Open the door slightly to stop the cycle. Wait for the spraying action to stop before completely opening the door.
2. Press and hold Cancel/Drain button once. The Cancel/Drain light will light up.
3. Close the door and the dishwasher starts a drain cycle (if water remains in bottom of dishwasher). Let the dishwasher drain completely. The Cancel/Drain light turns off after 2 minutes.

Changing a Cycle After Dishwasher Is Started

1. You can interrupt a cycle and restart your dishwasher from the beginning using the following procedure.
2. Open the door slightly to stop the cycle. Wait for the spraying action to stop, then open the door completely.
3. Check that detergent dispenser cover is still closed. If cover is open, you will need to refill the detergent dispenser before restarting your new cycle.
4. Press and hold CANCEL/DRAIN twice to reset the control.
5. Select new cycles and options.
6. Press START/RESUME.

Adding a Dish After Dishwasher Is Started

1. Check if Add a Dish indicator is lit. (Available on some models. Otherwise, proceed to Step 2.)
2. Open the door slightly to stop the cycle. Wait for the spraying action to stop, and then open the door completely.
3. Check whether the detergent dispenser cover is still closed. If it is open, the wash cycle has already started and adding a dish is not recommended.
4. If detergent has not yet been used (detergent dispenser cover is closed), you may add a dish.
5. Press START/RESUME.

Dishwasher Features

Your KitchenAid dishwasher may have some or all of these features.

ProScrub® Option Wash Area

The ProScrub® option wash area is located at the back of the lower level rack and the front corners of the upper level rack.

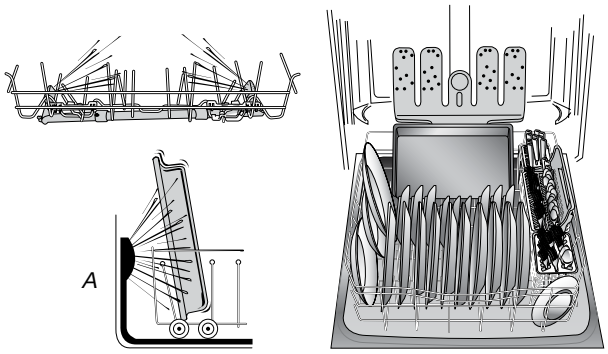

A. Back of dishwasher

NOTE: You must select the ProScrub® option to use this feature. Make sure items do not interfere with the water feed tube, spray arms, or the lower rack ProScrub® spray jets.

- Keep the last tine row in the back of the lower rack in the 60° angled position when using the ProScrub® option.
- In the back of the lower rack, load pans, casserole dishes, etc., with the soiled surfaces facing the ProScrub® Plus spray jets, and resting on the last row of tines in the angled position.
- Only one row of items may face the ProScrub® spray jets. Stacking, overlapping or nesting items will keep the ProScrub® spray jets from contacting all of the surfaces.
- In the upper rack, place tall or oddly shaped glasses or bottles in the front corners of the rack face down. It is best to load these items in between rows of tines.

ProScrub® Trio (on some models)

Lower jets clean pans, casseroles, etc., with tough food soil to eliminate the need for soaking and scrubbing of dirty, baked-on dishes.

Upper rack has two spray zones in the front corners to reach into deeper or oddly shaped items.

Silverware Basket

Use the slots in the covers to keep your silverware separated for optimum wash. There are specially designed slots (small round holes) for chopsticks. Mix silverware types to keep them separated. Load knives down, forks up, and alternate spoons, for best cleaning results.

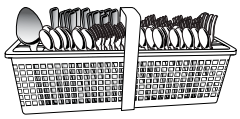

NOTE: If your silverware does not fit into the designated slots, lift and slide the covers off of the silverware basket.

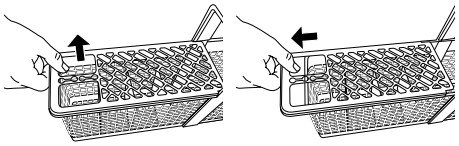

CULINARY CADDY® Utensil Basket

Use the utensil basket to hold specialty cooking utensils (serving spoons, spatulas, and similar items), or overflow silverware items.

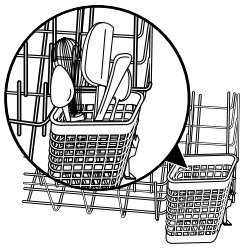

The basket hangs on the bottom rack in the right-hand corner. Load the basket while it is on the bottom rack or remove the basket for loading on a counter or table.

NOTE: Spin the spray arms. Be sure items in the basket do not stop the rotation of the spray arms.

SURE-HOLD® Cup and Stemware Holder

Fold down the extra shelf on the left-hand or right-hand side of the mid level rack to hold additional cups, stemware or long items such as utensils and spatulas.

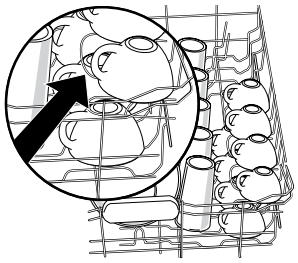

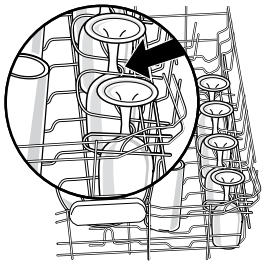

NOTE: Remove the culinary tool basket(s) when washing tall stemware or other tall items in the top rack.

FLEXI-FOLD DOWN™ Flexible Tines

The row of tines on the left-hand and right-hand sides of the top rack can be adjusted to make room for a variety of dishes.

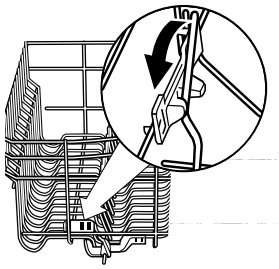

To adjust the fold-down tines:

1. Grasp the tip of the tine that is in the tine holder.
2. Gently push the tine out of the holder.
3. Lay the tines down, toward the center of the rack.

NOTE: The bottom rack may also have 1 or 2 rows of flexible tines located in the back of the rack. Follow the same instructions to adjust.

SURE-HOLD® Light Item Clips

The light item clips hold lightweight plastic items such as cups, lids, or bowls in place during washing.

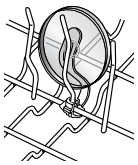

To move a clip:

1. Pull the clip up and off the tine.
2. Reposition the clip on another tine.

Premium Adjustable 2-Position Top Rack

After removing the culinary tool rack, you can raise or lower the top rack to fit tall items in either the top or bottom rack. Adjusters are located on each side of the top rack. Each adjuster has 2 preset positions.

To raise the rack, press both rack adjusters and lift the rack until it is in the Up position and level.

To lower the rack, press both rack adjusters and slide the rack to its Down position and level.

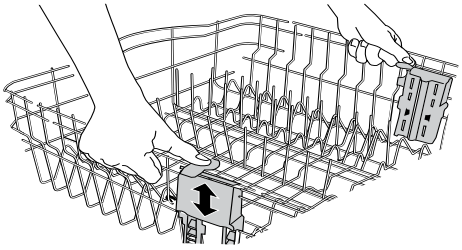

Removable Top Rack (for SatinGlide® rails)

The removable top rack allows you to wash larger items such as pots, roasters, and cookie sheets in the bottom rack.

IMPORTANT: Remove dishes prior to removing the top rack from dishwasher.

To remove the rack

To gain access to the track stops, pull the upper rack forward about halfway out of the tub.

To open, flip the track stop toward the outside of the tub.

After opening both track stops, pull top rack out of the rails.

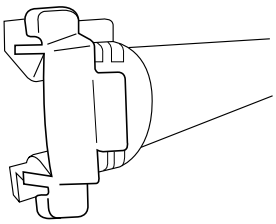

Track stop closed

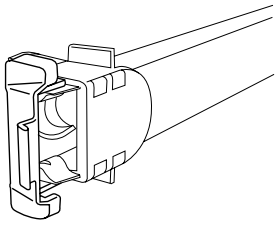

Track stop open

Sliding Bowl Tines

Sliding lower-rack tines that move left or right to fit your dishes. You can use this feature to fit larger items like cereal bowls and others.

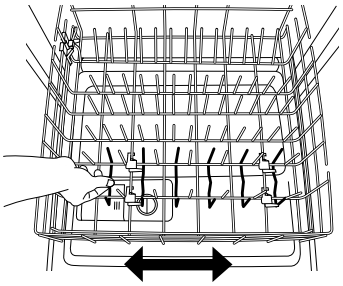

Removable Top Rack (for SatinGlide® Max rails)

The removable top rack allows you to wash larger items such as pots, roasters, and cookie sheets in the bottom rack.

IMPORTANT: Remove dishes prior to removing the top rack from the dishwasher.

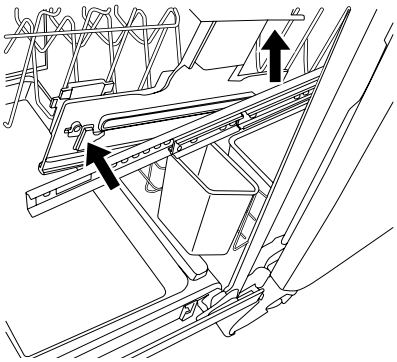

To remove the rack:

To gain access to the removable tabs on the tracks/rails, pull the upper rack forward about halfway out of the tub.

On one side, press the tab on the track in and pull up the front end of the rack out of the track. Then repeat this step on the other side to completely remove the front end of the rack.

Then remove the back end of the rack, by pulling the back end out with a slightly forward, and then upward motion.

To replace the rack:

Pull the tracks forward about halfway out of the tub.

Along the sides of the racks are round attachment tabs. Align the rack's back end attachment tabs with the cutout in the track. Push down into place.

Pull the tracks completely out, and align the rack's front end attachment tabs with the cutout in the track. Push down into place. You will hear a snap when the front end of the rack is secured into place on each side.

Removable Culinary Tool Rack (3rd level rack)

The removable culinary tool rack (3rd level rack) allows you to wash larger items in the upper rack, or remove both the culinary tool rack and top rack to wash larger times in the lower rack. See “Removable Top Rack” section.

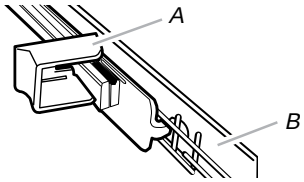

A. Track stop
B. Track

To remove the rack:

1. To access track stops, pull the rack forward until it stops and clicks into place.
2. To open track stops, flip the track stop to the outside of the track.
3. After opening both track stops, slide front wheels up and out of the slot in track. Continue to pull rack forward in track and slide the back wheels up and out of the track.
4. Close track stops.
5. Slide rack tracks back into dishwasher.

To replace the rack:

1. Gently pull rack tracks forward in dishwasher until they stop and click into place.
2. To open track stops, flip the track stop to the outside of the track.
3. Place the back rack rollers on each side of the rack into the track slot and roll the rack back into the tracks.
4. Insert front rack rollers on each side of the rack into the rack slots.
5. Close track stops on both sides of rack and slide rack back into dishwasher.

Culinary Tool Rack (3rd level rack)

The culinary tool rack is designed with 2 movable baskets to hold extra silverware, knives and cooking utensils.

Install the baskets in this up position when you have extra silverware and flatware to wash.

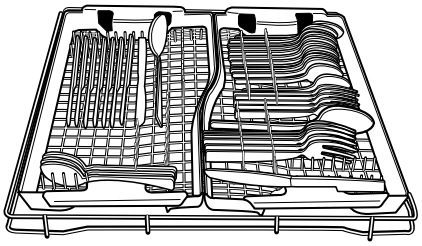

Up position

Install the baskets in this down position when you have extra silverware, knives, or utensils requiring more room to wash.

IMPORTANT: When you are using the culinary tool baskets in the down position, the top rack must also be in the lowest position.

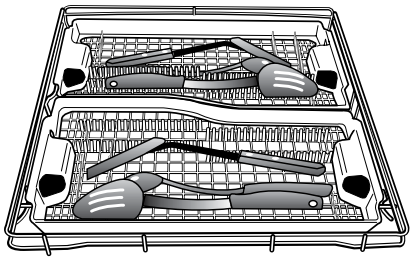

Down position

Remove the front basket when more room is needed in the top rack for use of cup shelves, or placement of other tall items.

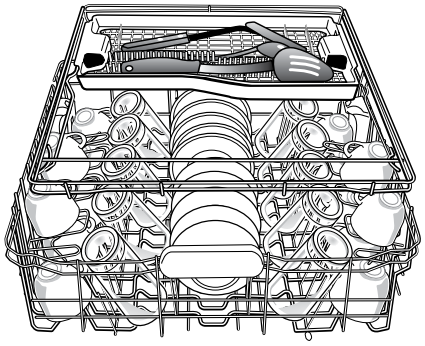

Dishwasher Care

Cleaning

Cleaning the exterior

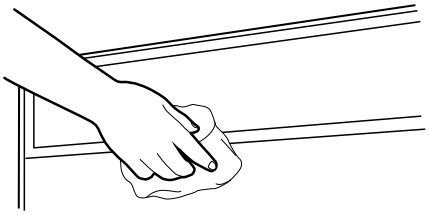

In most cases, regular use of a soft, damp cloth or sponge and a mild detergent is all that is necessary to keep the outside of your dishwasher looking nice and clean. If your dishwasher has a stainless steel exterior, a stainless steel cleaner is recommended, such as affresh®† Stainless Steel Cleaner Part Number W10355016.

Cleaning the interior

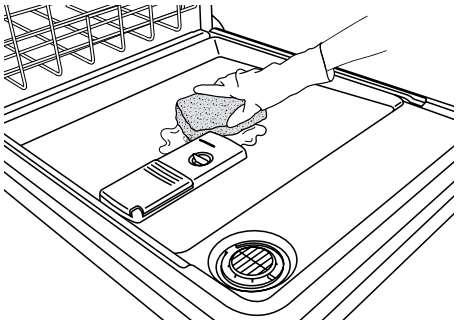

Hard water minerals can cause a white film to build up on the inside surfaces, especially just beneath the door area.

Do not clean the dishwasher interior until it has cooled. You may want to wear rubber gloves. Do not use any type of cleanser other than dishwasher detergent because it may cause foaming or sudsing.

To clean interior

Make a paste with powdered dishwasher detergent on a damp sponge and clean.

OR
Use liquid automatic dishwasher detergent and clean with a damp sponge.

OR
See the vinegar rinse procedure in “Cloudy or spotted dishware (and hard water solution)” in “Troubleshooting” section.

NOTE: Run a normal cycle with dishwasher detergent after cleaning the interior.

Dishwasher Maintenance Procedure

Cleaning the Dishwasher

Clean the exterior of dishwasher with a soft, damp cloth and mild detergent. If your dishwasher has a stainless steel exterior, a stainless steel cleaner is recommended, such as affresh® Stainless Steel Cleaner Part Number W10355016.

Removal of Hard Water / Filming:

Recommended use of a monthly maintenance product such as affresh® Dishwasher Cleaner Part Number W10282479.

- Load your dishwasher (preferably with dishes affected by filming / hard water).
- Place tablet in main wash compartment of detergent dispenser.
- Select cycle/option best for heavily soiled dishes and start dishwasher.

NOTE: Recommended to use a premeasured detergent tablet or pack for regular daily use.

Drain Air Gap

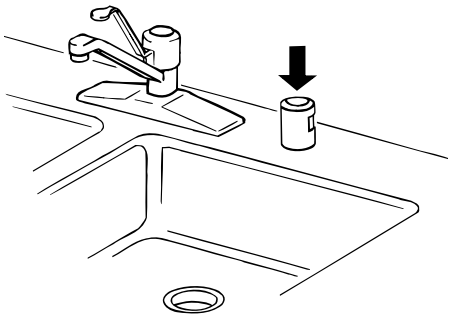

Some state or local plumbing codes require the addition of a drain air gap between a built-in dishwasher and the home drain system. Check the drain air gap when your dishwasher is not draining well.

The drain air gap is usually located on top of the sink or countertop near the dishwasher.

NOTE: The drain air gap is an external plumbing device that is not part of your dishwasher. The warranty provided with your dishwasher does not cover service costs directly associated with the cleaning or repair of the external drain air gap.

To clean the drain air gap

Clean the drain air gap periodically to ensure proper drainage of your dishwasher. With most types, you lift off the chrome cover. Unscrew the plastic cap. Then check for any soil buildup. Clean if necessary.

Vacation or Extended Time Without Use

To reduce the risk of property damage

- If you will not be using the dishwasher during the summer months, turn off the water and power supply to the dishwasher.
- Make sure the water supply lines are protected against freezing conditions. Ice formations in the supply lines can increase water pressure and damage your dishwasher or home. Damage from freezing is not covered by the warranty.
- When storing your dishwasher in the winter, avoid water damage by having your dishwasher winterized by authorized service personnel.

Consumer Troubleshooting Guide

First try the solutions suggested here. If you need further assistance or more recommendations that may help you avoid a service call, refer to the warranty page in this manual and scan the code with your mobile device, or visit **http://kitchenaid.custhelp.com**. In Canada, visit **www.kitchenaid.ca** (website may not be compatible with some mobile devices).

Contact us by mail with any questions or concerns at the address below:

In the U.S.A.:

KitchenAid Brand Home Appliances
Customer eXperience Center
553 Benson Road
Benton Harbor, MI 49022-2692

In Canada:

KitchenAid Brand Home Appliances
Whirlpool Canada LP
200 – 6750 Century Ave.
Mississauga, Ontario L5N 0B7

Please include a daytime phone number in your correspondence.

PROBLEM	SOLUTION
DISHWASHER DOES NOT RUN	**NOTE:** It is normal for the dishwasher to repeatedly pause several times during a cycle. If the Start/Resume light is blinking, close the door and push START/RESUME. Be sure the door is closed and latched. Be sure you have disabled Sleep Mode by pressing either START/RESUME or CANCEL, or opening and closing the door before selecting your cycle/option. Check that there is not an interference with large casserole dishes and the wash system at the back of the dishwasher. Adjust loading as necessary to ensure door is closed and latched. Be sure you have selected a cycle. (See “Cycle and Option Descriptions” section.) Be sure there is power to the dishwasher. A circuit breaker or fuse may have tripped. If lights other than Start/Resume blink and the unit will not run, you will need to call for service.
DETERGENT REMAINS IN THE DISPENSER OR TABLET IS ON BOTTOM OF TUB	Check for dishware such as cookie sheets, cutting boards, or large containers, etc., that may be blocking the detergent dispenser from opening properly. Be sure your detergent is fresh and lump free. Be sure the cycle has completed (the Clean light is on). If it has not completed, you will need to resume the cycle by closing the door and pressing START/RESUME.
CYCLE RUNS TOO LONG	**NOTES:** ■ To use less water and reduce energy consumption you will encounter cycles that typically run for up to 3 hours. ■ A water heater setting of 120°F (49°C) is best, the dishwasher will delay longer while heating cooler water. ■ Some options will add time to the cycle. (See “Cycle and Option Descriptions” section.) The ProDry™ or Heat Dry option adds approximately ½ hour. Try the Express Wash cycle. Run the hot water at a faucet close to the dishwasher before starting the cycle.
DISHWASHER NOT DRYING	**NOTE:** Plastic and items with nonstick surfaces are difficult to dry because they have a porous surface which tends to collect water droplets. Towel drying may be necessary. Use of rinse aid along with the ProDry™ or Heat Dry option is needed for proper drying. Proper loading of items can affect drying. (See specific loading instructions within this guide.) Glasses and cups with concave bottoms hold water. This water may spill onto other items when unloading. ■ Unload the bottom rack first. ■ Locate these items on the more slanted side of the rack for improved results.
WILL NOT FILL	Be sure the water is turned on to the dishwasher. Check that the float is free from obstructions. (See “Parts and Features.”) Check for suds in the dishwasher. If foam or suds are detected, the dishwasher may not operate properly or may not fill with water. (See “Blinking Lights” in “Troubleshooting” section.)
WATER REMAINS IN THE TUB/WILL NOT DRAIN	Be sure the cycle has completed (the Clean light is on). If it has not, you will need to resume the cycle by closing the door and pressing START/RESUME. If dishwasher is connected to a food waste disposer, be sure the knockout plug has been removed from the disposer inlet. Check for kinks in the drain hose. Check for food obstructions in the drain or disposer. Check your house fuse or circuit breaker.

PROBLEM	SOLUTION
HARD WATER (WHITE RESIDUE ON DISHWASHER INTERIOR OR GLASSWARE)	**NOTE:** Extremely hard water mineral deposits can cause damage to your dishwasher and make it difficult to achieve good cleaning. A water softener is strongly recommended if your hardness is 15 grains or more. If a water softener is not installed, the following steps may help: Use a commercial cleaner designed for dishwashers once per month. Clean the upper and lower filters at least once per month. (See “Cleaning Instructions” in the “Filtration System” section.) Always use a rinse aid. Always use a high-quality, fresh detergent. Use a detergent booster/water softener additive designed for dishwashers.
ODORS	**NOTE:** If the dishwasher is not used daily, you can run a rinse cycle with the partial load until a full load is ready to run, or use the Top Rack Only option (on some models) for partial loads. Run a vinegar rinse through the dishwasher by putting 2 cups (500 mL) of white vinegar in an upright glass measuring cup in the lower rack. Run a normal cycle with the Heat Dry option turned off. Do not use detergent. The dishwasher may not be draining properly, see “Water Remains In The Tub/Will Not Drain” in the “Troubleshooting” section.
NOISY	**NOTES:** ■ Surging sounds can occur periodically throughout the cycle while the dishwasher is draining. ■ Normal water valve hissing may be heard periodically. ■ A normal snap sound may be heard when the detergent dispenser opens during the cycle and when the door is opened at the end of the cycle. ■ Improper installation will affect noise levels. Be sure the filters are properly installed. A thumping sound may be heard if items extend beyond the racks and interfere with the wash arms. Readjust the dishware and resume the cycle.
FOOD SOILS REMAIN ON DISHES	Be sure the dishwasher is loaded correctly. Improper loading can greatly decrease the washing performance (see “Dishwasher Use” section). Check filter to ensure it is properly installed. Clean it if needed. (See “Cleaning Instructions” in the “Filtration System” section for details.) Select the proper cycle and option for the type of soils. The ProWash™ or the Tough cycle with the ProScrub® (on some models) option can be used for tougher loads. Be sure the incoming water temperature is at least 120°F (49°C). Use the proper amount of fresh detergent. More detergent is needed for heavier-soiled loads and hard water conditions. Scrape food from dishes prior to loading (do not prerinse).
DISHES DIRTY/SUDS IN DISHWASHER/CYCLE NOT COMPLETE	If foam or suds are detected by the dishwasher sensing system, the dishwasher may not operate properly or may not fill with water. Suds can come from: ■ Using the incorrect type of detergent, such as dish detergent for hand washing dishes, laundry detergent, or hand soap. ■ Not replacing the rinse aid dispenser cap after filling (or refilling) the rinse aid. ■ Using an excessive amount of dishwasher detergent. Call for service. If no water was present in the machine at any time during a heated wash cycle, the cycle will end and the Clean LED will not come on. See “Will Not Fill” in the “Troubleshooting” section.
SANITIZED LIGHT BLINKING	If the sanitized light is blinking, the load is *NOT* sanitized. The cycle was interrupted in the final rinse, or the temperature for your water heater is set too low. Set your water heater to 120ºF (49°C).
DAMAGE TO DISHWARE	Improper loading can cause dishes to become chipped or damaged. (See specific loading instructions within this guide.)
BLINKING LIGHTS	Blinking LED's will occur when the cycle is paused or when the cycle has been interrupted by opening the door. In this case, the Start/Resume button LED, the Cycle Status Indicator LED(s), and the countdown bars on the Cycle Status Display all blink together to indicate that attention is needed. See “Start or Resume a Cycle” in the “Dishwasher Use” section. Blinking LED's can also occur when certain errors have been detected. In this case, the Clean/Complete LED will blink 4 times in a row with a pause in between each set of blinks. When this error occurs, the controls will lock out and not allow another cycle to be started.

PROBLEM	SOLUTION
CLOUDY OR SPOTTED DISHWARE (AND HARD WATER SOLUTION)	**NOTES:** ■ Liquid rinse aid is necessary for drying and to reduce spotting. ■ Use the correct amount of detergent. Confirm that the cloudiness is removable by soaking the item in white vinegar for 5 minutes. If the cloudiness disappears, it is due to hard water. Adjust the amount of detergent and rinse aid. See “Hard Water (White Residue On Dishwasher Interior Or Glassware)” in the “Troubleshooting” section. If it does not come clear, it is due to etching (see below). Be sure the incoming water temperature is set at 120°F (49°C). Try using the High Temp and Sani Rinse options. To remove spotting, run a vinegar rinse through the dishwasher. ■ Wash and rinse the affected dishware and load into dishwasher. Remove all silverware and metal items. Put 2 cups (500 mL) of white vinegar in a glass measuring cup in the lower rack. Run a normal cycle with the Heat Dry option turned off. No detergent is needed.
ETCHING (PERMANENT CLOUDINESS)	This is an erosion of the surface of the glassware and can be caused by a combination of: water that is too hot, from using too much detergent with soft water or by pre-washing. Detergent needs food soil to act upon. If etching has occurred, the glassware is permanently damaged. To avoid further etching, adjust the detergent amount to match the water hardness, stop pre-washing, and use water heating options only when incoming water temperature is below 120°F (49°C).
LEAKING WATER	Be sure dishwasher has been installed properly and is level. Suds can cause the dishwasher to overflow. Measure the detergent accurately and use only detergents designed for use in a dishwasher. Less detergent is needed in soft water. Try another brand of detergent if sudsing continues. To avoid rinse aid leaking from the dispenser, be sure the lid is securely attached and avoid overfilling.
TUB IS DISCOLORED	**NOTES:** ■ High iron content in the water can discolor the tub. ■ Tomato-based foods can discolor the tub or dishware. ■ A citrus-based cleaner can be used to clean.

Notes

Section 3: Installation

This section provides installation requirements and procedures for the “KitchenAid 2015 Microfiltration Dishwashers.”

- Dishwasher Safety
- Installation Requirements
- Location Requirements
- Drain Requirements
- Electrical Requirements
- Installation Instructions
- Check Operation
- If Dishwasher Does Not Operate
- Additional Tips

Dishwasher Safety

Your safety and the safety of others are very important.

We have provided many important safety messages in this manual and on your appliance. Always read and obey all safety messages.

This is the safety alert symbol.

This symbol alerts you to potential hazards that can kill or hurt you and others.

All safety messages will follow the safety alert symbol and either the word “DANGER” or “WARNING.” These words mean:

DANGER — **You can be killed or seriously injured if you don't immediately follow instructions.**

WARNING — **You can be killed or seriously injured if you don't follow instructions.**

All safety messages will tell you what the potential hazard is, tell you how to reduce the chance of injury, and tell you what can happen if the instructions are not followed.

WARNING

Tip Over Hazard

Do not use dishwasher until completely installed.

Do not push down on open door.

Doing so can result in serious injury or cuts.

You Need to:

- Slowly open dishwasher door while someone grasps the rear of the dishwasher. Remove shipping materials and drain hose. Close dishwasher door until latched.

NOTE: Each dishwasher is tested at the factory and may contain some residual water in the tub as a result of the test.

- Observe all governing codes and ordinances.
- Install this dishwasher as specified in these instructions.
- Installation should be performed by a qualified service technician.
- The dishwasher must be installed to meet all electrical and plumbing national and local codes and ordinances.

Care shall be exercised when the appliance is installed or removed, to reduce the likelihood of damage to the power cord.

WARNING: To reduce the risk of electric shock, fire, or injury to persons, the installer must ensure that the dishwasher is completely enclosed at the time of installation.

Installation Requirements

Tools and Parts

Gather the recommended tools and parts before starting installation. Read and follow the instructions provided with any tools listed here.

All Installations

Tools Needed:

Pliers	Flat-blade screwdriver
Phillips screwdriver	Utility knife
5⁄16" and 1⁄4" nut drivers or hex sockets	Small level
Measuring tape or ruler	5⁄8" open-end wrench
10" adjustable wrench that opens to 1⁄8" (2.9 cm)	Torx®† T20® and, if installing custom front panels, Torx® T15® screwdrivers

Other Useful Items You May Need:

Flashlight	Shallow pan	Bath towel	Masking or duct tape

Parts Supplied:

Drain hose clamps (2) (1 large/red and 1 small/ green)	Drain hose	#10 x 1⁄2" Phillips-head screws (2)	Undercounter mounting brackets (2)	Door handle (on some models)

Make sure all these parts are included in the literature package. If parts are not included, call 1-800-422-1230. In Canada, call 1-800-807-6777.

Other Parts Needed: (not provided)

3⁄8" Compression x 3⁄4" Hose Fitting with rubber seal and 90˚ elbow (required to properly connect household water line to the dishwasher) (Whirlpool Part Number W10685193)	**Household Wiring (Metallic) Strain Relief** to fit 7⁄8" (2.2 cm) hole (required to properly secure household wiring to the dish-washer terminal box) **NOTE**: Use only UL Listed/CSA Approved part (Whirlpool Part Number 4396672)	**Twist-on Wire Connectors** **NOTE**: Confirm proper size for connecting your gauge of house-hold wiring to the 16-gauge wiring in the dishwasher **NOTE**: Use only UL Listed/CSA Approved parts.
Call Whirlpool Parts: 1-800-442-9991, for Part Number above; or see local electrical/plumbing supply retailer for equivalent.		

†®TORX, T15, and T20 are registered trademarks of Acument Intellectual Properties, LLC.

Optional Accessory Parts Available:

Moisture Barrier Tape **NOTE**: Moisture barrier tape is an optional, added level of protection if installing a dishwasher under a wooden countertop. (Whirlpool Part Number 4396277)	Side Panel Kit For enclosing the side of the dishwasher when installing it at the end of your cabinetry. (Whirlpool Part Number varies with color)
Call Whirlpool Parts: 1-800-442-9991, for Part Number above.	

First-time Installations:

Check local codes. Check existing electrical supply. See the "Electrical Requirements" section. It is recommended that electrical connections be made by a licensed electrical installer.

Additional Tools Needed:

Cordless drill with 1⁄2", 3⁄4" and 1 1⁄2" hole saw bits	Small tubing cutter	Wire stripper

Additional Parts Needed (not provided)

Copper tubing (3⁄8" O.D. suggested) or Flexible Braided Water Supply Line Kit (Whirlpool Part Number W10278635RP). Kit includes Braided Hose and 3⁄8" Compression x 3⁄4" Hose Fitting	Screw-Type Clamps 1 1⁄2" - 2" (3.81 - 5 cm) (3 maximum)	Optional-Longer Drain Hose Maximum length: 12 ft (3.7 m) **NOTE**: Must meet AHAM/IAPMO test standards, fit 1" (2.5 cm) drain connection, and be resistant to heat and detergent. (Whirlpool Part Number 3385556)
Call Whirlpool Parts: 1-800-442-9991, for Part Number above, or see local plumbing supply retailer for equivalent.		

NOTE: If using a flexible braided hose, replace inlet hose after 5 years to reduce the risk of hose failure. Record hose installation or replacement dates on the hose for future reference.

For Direct Wire	For Power Cord
Cabinet Grommet For 1 1⁄2" (3.8 cm) hole in cabinet. (Whirlpool Part Number 302797) **NOTE**: Required for metal cabinets.	**Power Cord Kit** Kit typically includes power cord, metallic strain relief, grommet, and twist-on wire connectors. (Whirlpool Part Number 4317824)
Call Whirlpool Parts: 1-800-442-9991, for Part Number above; or see local electrical supply retailer for equivalent.	

Location Requirements

Dishwasher must be fully enclosed (top, sides, back, and floor) upon installation. A side panel kit is available from your dealer for installing your dishwasher at the end of your cabinetry.

An optional moisture barrier accessory is also available for installing underneath a wooden countertop. See the “Tools and Parts” section at the front of the guide for part details and orders.

Check location where dishwasher will be installed. The location must provide:

- Convenient access for loading and unloading dishes. Corner locations require a 2" (5.1 cm) minimum clearance between the side of the dishwasher door and the wall or cabinet.
- Easy access to water, electricity and drain.
  - Grounded electrical supply required.
  - Make sure pipes, wires and drain hose are within the shaded area shown in the “Product and Cabinet Opening Dimensions” section.
  - Do not run drain lines, water lines or electrical wiring where they can interfere with or contact dishwasher motor or legs.
  - Shelter dishwasher and water lines leading to dishwasher against freezing. Damage from freezing is not covered by the warranty.

  NOTE: If dishwasher will be left unused for a period of time or in a location where it may be subject to freezing, have it winterized by authorized service personnel.
- A square opening for proper operation and appearance.
- The cabinet front to be perpendicular to floor.
- A level floor.
  Helpful Hint: If floor at front of opening is not level with floor at rear of opening, shims may be used to level dishwasher.
  NOTE: To avoid shifting during dishwasher operation, shims must be securely attached to the floor.
- The location where the dishwasher will be installed must provide clearance between motor and flooring. Motor should not touch the floor.
- Do not install dishwasher over carpeted flooring.

Product and Cabinet Opening Dimensions

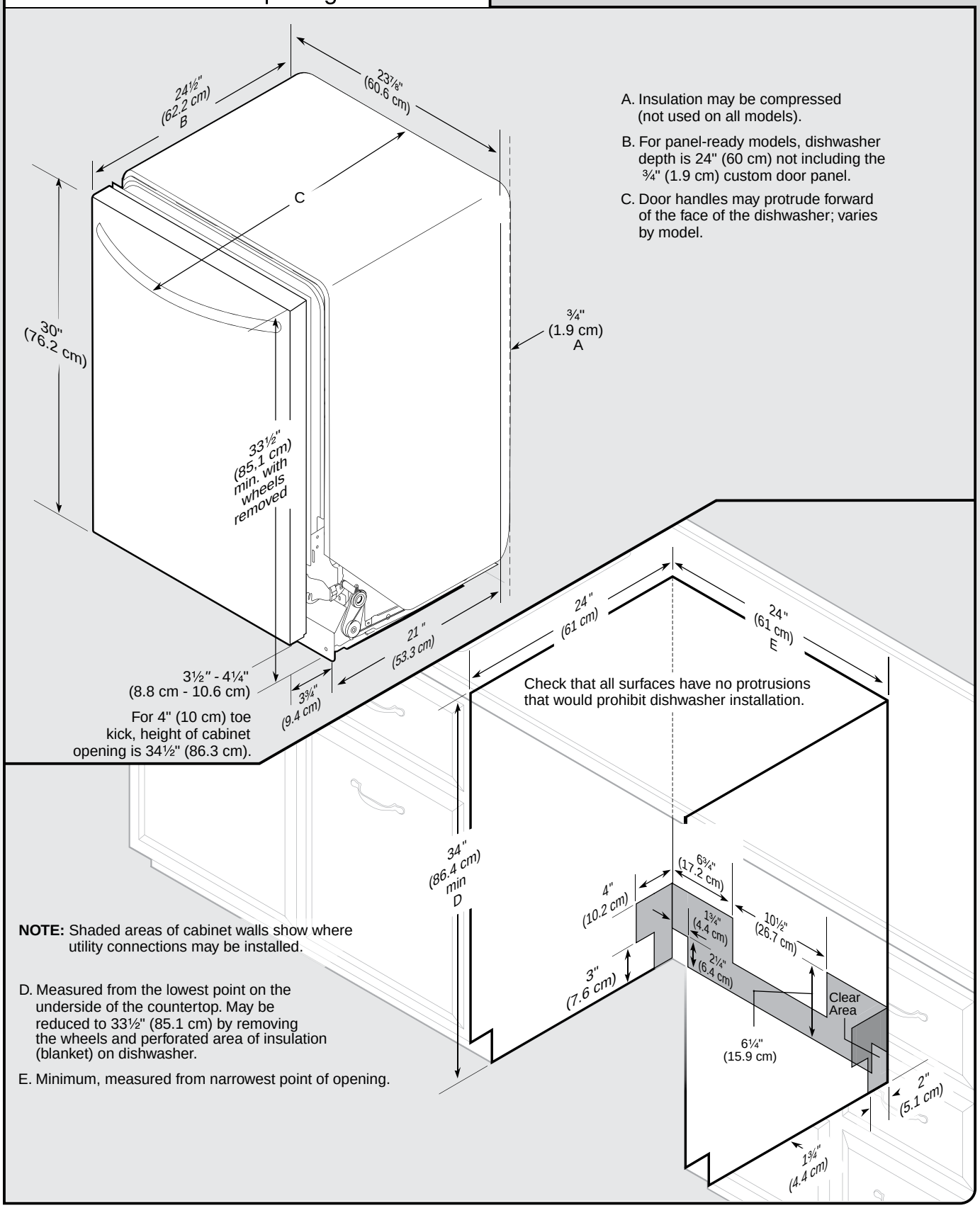

A. Insulation may be compressed (not used on all models).

B. For panel-ready models, dishwasher depth is 24" (60 cm) not including the ¾" (1.9 cm) custom door panel.

C. Door handles may protrude forward of the face of the dishwasher; varies by model.

NOTE: Shaded areas of cabinet walls show where utility connections may be installed.

D. Measured from the lowest point on the underside of the countertop. May be reduced to 33½" (85.1 cm) by removing the wheels and perforated area of insulation (blanket) on dishwasher.

E. Minimum, measured from narrowest point of opening.

Drain Requirements

- A new drain hose is supplied with your dishwasher. If drain hose is not long enough, use a new drain hose with a maximum length of 12 ft (3.7 m) that meets all current AHAM/IAPMO test standards, is resistant to heat and detergent, and fits the 1" (2.5 cm) drain connector of the dishwasher. See the "Tools and Parts" section at the front of the guide for part details and orders.
- Make sure to connect drain hose to waste tee or disposer inlet above drain trap in house plumbing and 20" (50.8 cm) minimum above the floor. It is recommended that the drain hose either be looped up and securely fastened to the underside of the counter, or be connected to an air gap.

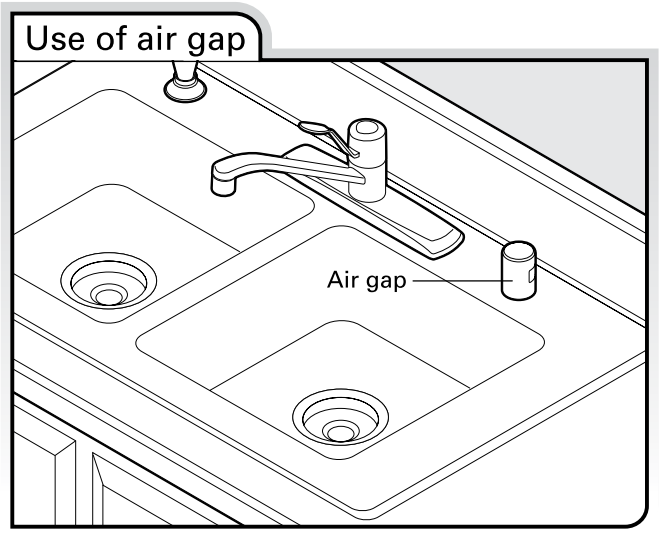

- Make sure to use an air gap if the drain hose is connected to house plumbing lower than 20" (50.8 cm) above sub floor or floor.
- If required, the air gap should be installed in accordance with the air gap installation instructions. When you are connecting the air gap, a rubber hose (not provided) will be needed to connect to the waste tee or disposer inlet.
- Use ½" minimum I.D. drain line fittings

Water Supply Requirements

- A hot water line with 20 to 120 psi (138 to 862 kPa) water pressure can be verified by a licensed plumber.
- 120°F (49°C) water at dishwasher.
- ⅜" O.D. copper tubing with compression fitting or flexible braided water supply line. See the "Tools and Parts" section at the front of the guide for part details and orders.

  NOTE: ½" minimum plastic tubing is not recommended.
- A 90° elbow with ¾" hose connection with rubber washer. See the "Tools and Parts" section at the front of the guide for part details and orders.
- Do not solder within 6" (15.2 cm) of the water inlet valve.

Electrical Requirements

Be sure that the electrical connection and wire size are adequate and in conformance with the National Electrical Code, ANSI/NFPA 70 - latest edition and all local codes and ordinances.

A copy of the above code standards can be obtained from:

National Fire Protection Association
1 Batterymarch Park
Quincy, MA 02169-7471

You Must Have:

- 120-volt, 60 Hz, AC-only, 15- or 20-amp, fused electrical supply.
- Copper wire only.
- A maximum of two field wiring supply conductors (12 AWG largest size) plus one grounding conductor are permitted in the terminal box.

We Recommend:

- A time-delay fuse or circuit breaker.
- A separate circuit.

If Connecting Dishwasher With A Power Cord:

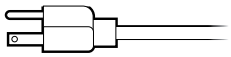

- Use UL Listed power cord kit marked for use with dishwasher. See the "Tools and Parts" section at the front of the guide for part details and orders.
- Power cord must plug into a grounded 3 prong outlet, located in the cabinet next to the dishwasher opening. Outlet must meet all local codes and ordinances.

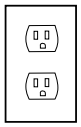

If Connecting Dishwasher With Direct Wiring:

- Use flexible, armored or nonmetallic sheathed, copper wire with grounding wire that meets the wiring requirements for your home and local codes and ordinances.
- Use a UL Listed/CSA Approved metallic strain relief. See the "Tools and Parts" section at the front of the guide for part details and orders.

Installation Instructions

⚠ WARNING

Electrical Shock Hazard

Disconnect electrical power at the fuse box or circuit breaker box before installing dishwasher.

Failure to do so can result in death or electrical shock.

1 Disconnect power

Disconnect electrical power at the fuse box or circuit breaker box before installing dishwasher.

2 Shut off water supply

Shut off the water supply to the dishwasher.

3 Do you already have utility hookups?

Yes —Follow instructions in the "Prepare Cabinet Opening—Existing Utilities" section.

No —Follow instructions in the "Prepare Cabinet Opening—New Utilities" section.

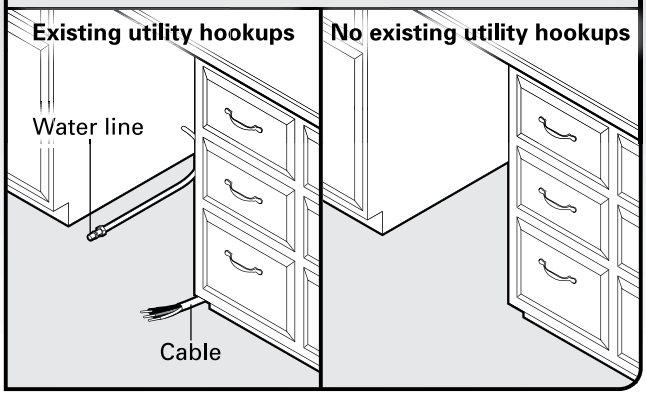

Prepare Cabinet Opening—Existing Utilities

1 Check water and electrical placement

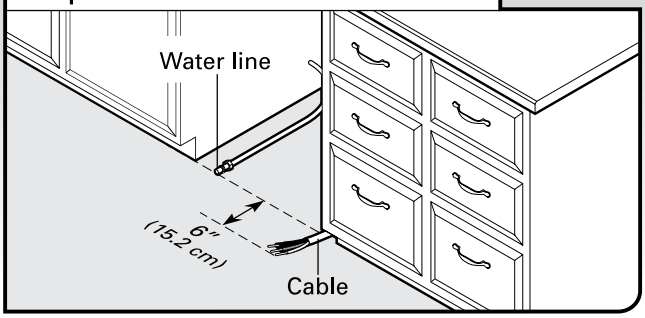

When removing a previous dishwasher, be sure to avoid damaging the existing power cord, drain line, and water line connected to the dishwasher.

If the water line and the cable extend to the locations shown, proceed to the "Install Drain Hose" section. If they do not reach far enough, follow the instructions in the "Prepare Cabinet Opening—New Utilities" section.

Prepare Cabinet Opening—New Utilities

Prepare And Route The Electrical Supply

What type of electrical connection will you use?

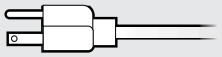

Power Cord:
Follow Option A instructions

Direct Wire:
Follow Option B instructions

Option A, Power Cord:

NOTE: A grounded 3 prong outlet is required inside a cabinet next to the dishwasher cabinet opening.

1 Power Supply Cord—Drill hole

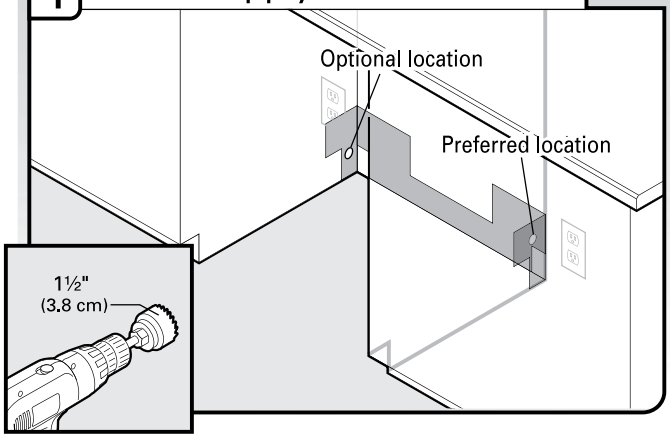

Drill a 1½" (3.8 cm) hole in cabinet side or rear. See the "Product and Cabinet Opening Dimensions" section.

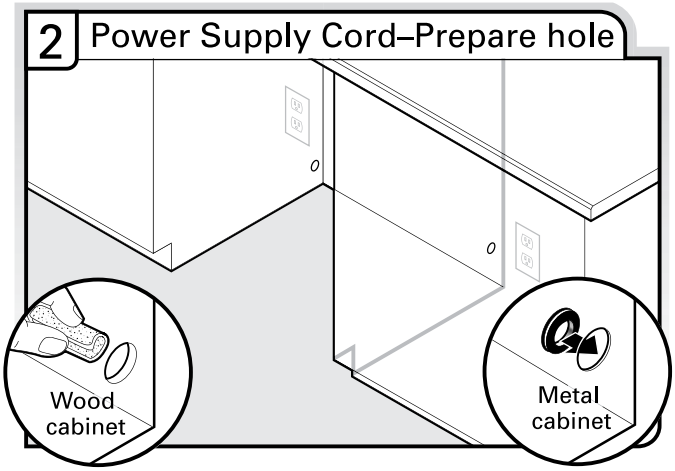

Wood cabinet: Sand the hole until smooth.

Metal cabinet: Cover edges of hole with grommet included with power cord kit.

See the “Tools and Parts” section at the front of the guide for part details.

Option B, Direct Wire

Helpful Tip: Wiring the dishwasher will be easier if you route the cable into the cabinet opening from the right-hand side.

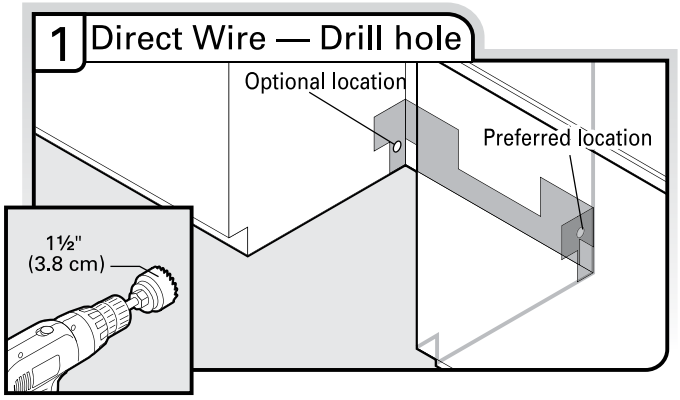

Drill a 1½" (3.8 cm) hole in right-hand cabinet side or rear.

See the “Product and Cabinet Opening Dimensions” section.

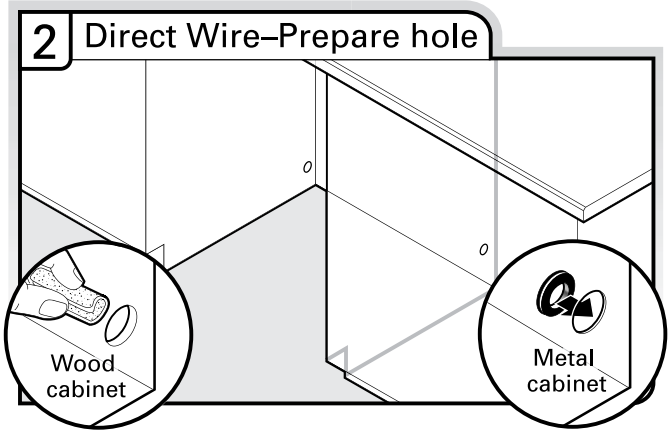

Wood cabinet: Sand the hole until smooth.

Metal cabinet: Cover edges of hole with a grommet.

See the “Tools and Parts” section at the front of the guide for part details.

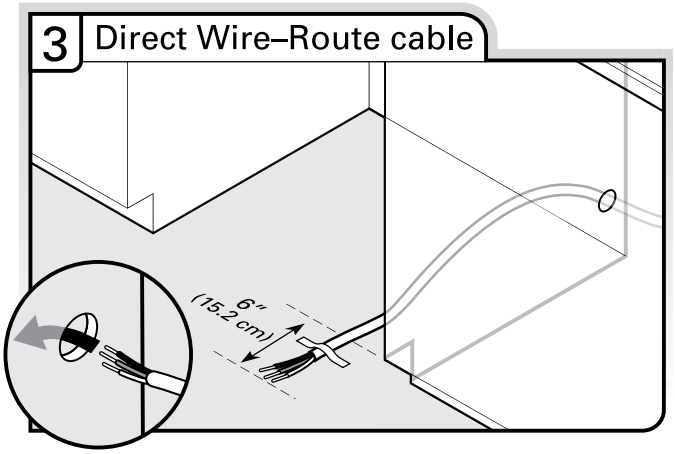

Route cable from power supply through cabinet hole (cable must extend to the right front side of cabinet opening). Tape cable to the floor in area shown. This will prohibit cable from moving when dishwasher is moved into cabinet opening.

Prepare and Route Water Line

Helpful Tip: Routing the water line through the left-hand side of cabinet opening will make water connection easier.

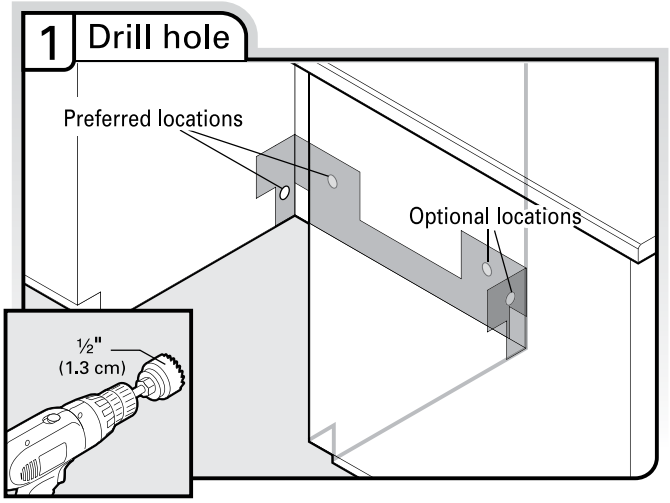

Drill a ½" (1.3 cm) hole in the cabinet side or rear.

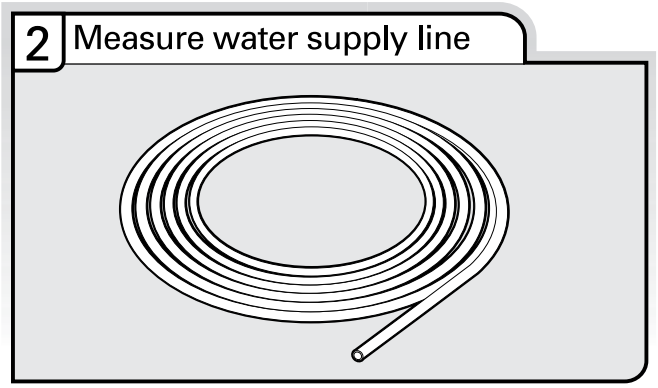

If using copper tubing, measure overall length of copper tubing required to reach the water supply, cut to length and attach compression fittings.

If using flexible braided line, confirm braided line is of adequate length. See the “Tools and Parts” section at the front of the guide for part details and orders.

NOTE: If using a flexible braided hose, replace inlet hose after 5 years to reduce the risk of hose failure. Record hose installation or replacement dates on the hose for future reference.

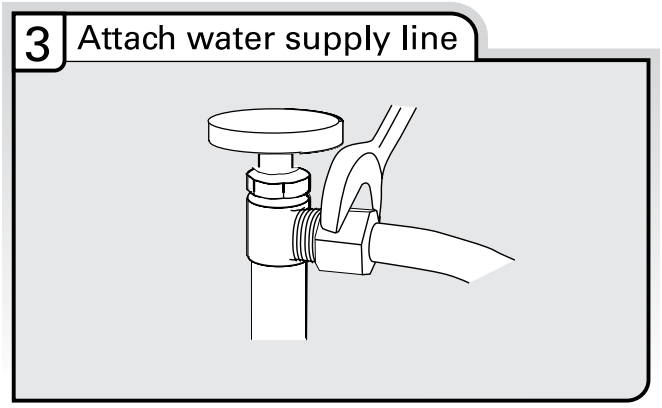

Attach the water supply line (copper tubing or flexible braided line) to the hot water line using a connection configuration that is in compliance with local codes and ordinances. The water supply to the dishwasher should have a manual shutoff valve located under the sink.

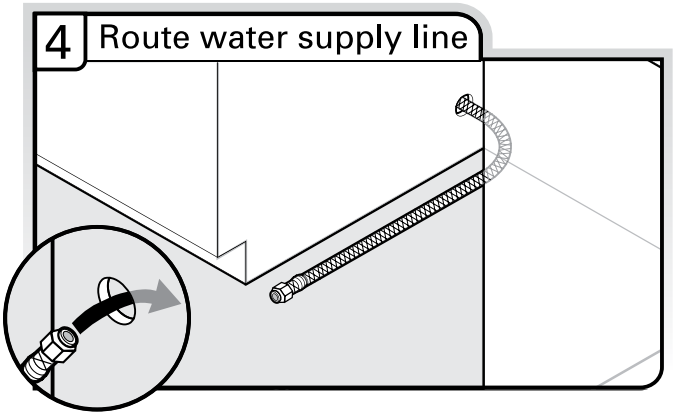

Slowly route water supply line through hole in cabinet. (If you are using copper tubing, it will bend and kink easily, so be gentle.) It should be far enough into the cabinet opening to connect it to the dishwasher inlet on the front left side of the dishwasher.

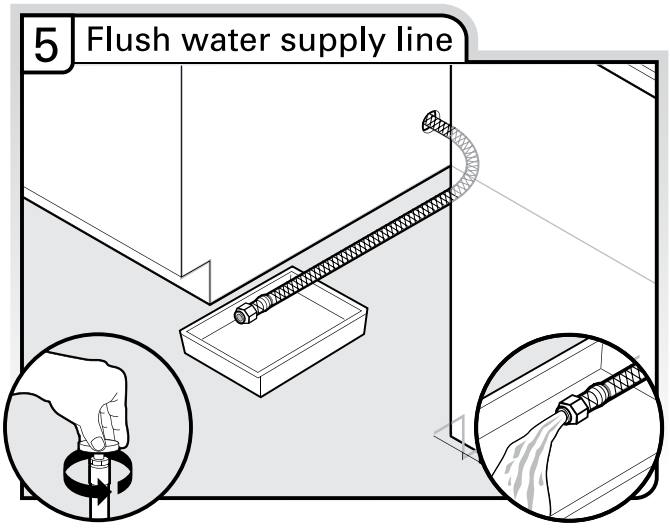

Slowly turn water shutoff valve to “ON” position. Flush water into a shallow pan until clear to get rid of particles that could clog the inlet valve. Turn shutoff valve to “OFF” position.

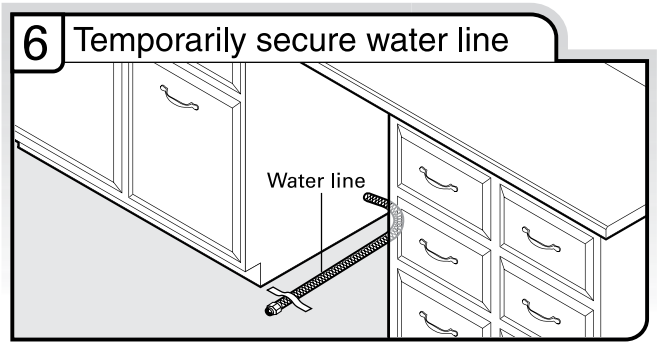

Route water line and tape it to the floor in area shown. This will keep it from moving when dishwasher is moved into cabinet opening.

Install Drain Hose

IMPORTANT: Always use a new drain hose. Check local codes to determine whether an air gap is required.

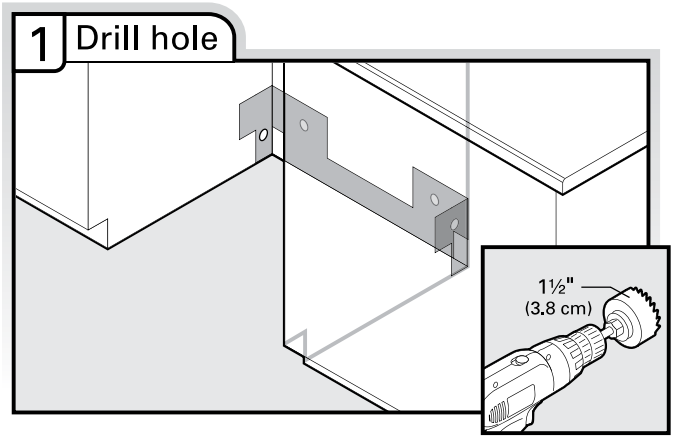

If needed, drill a 1½" (3.8 cm) diameter hole in cabinet wall or side of the opening closest to the sink.

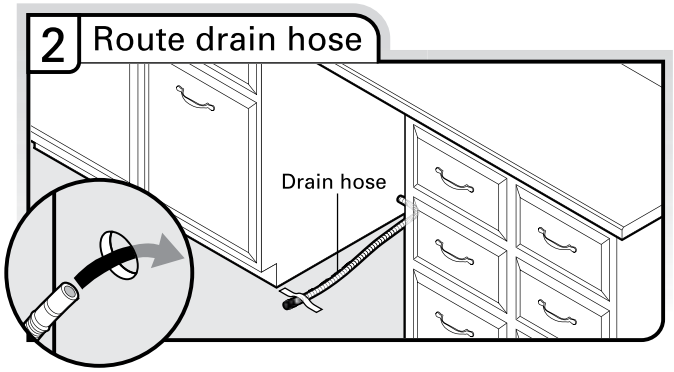

Route drain hose, as shown, through hole in cabinet to the front center of opening where drain connection will be made. Tape drain hose to the floor in area shown. This will prohibit it from moving when dishwasher is moved into cabinet opening.

3 Connect drain hose

Connect drain hose to waste tee or waste disposer using one of the following options:

- Option A, Waste disposer – no air gap
- Option B, No waste disposer – no air gap
- Option C, Waste disposer – with air gap
- Option D, No waste disposer – with air gap

IMPORTANT: The drain hose connection of the disposer or a waste tee must be made before the drain trap and at least 20" (50.8 cm) above the floor where the dishwasher will be installed.

Helpful Tip: To reduce vibration of the hose, keep the hose away from the floor.

Option A, Waste Disposer – No Air Gap

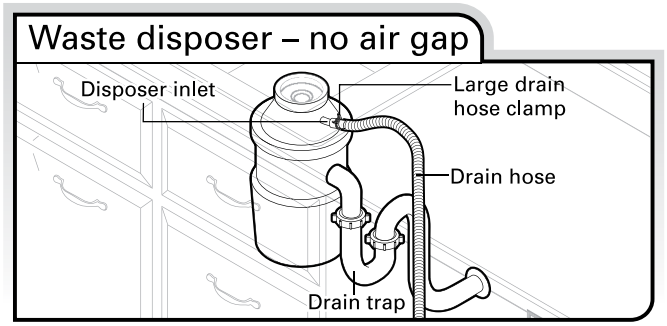

Helpful Tip: Remove disposer knockout plug.

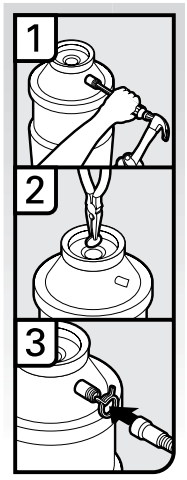

1. Using a hammer and screwdriver, knock plug into disposer.
2. Use needle-nose pliers to remove plug.
3. Attach drain hose to disposer inlet with large drain hose clamp (provided). Use pliers to squeeze clamp open and move into position.

Option B, No Waste Disposer – No Air Gap

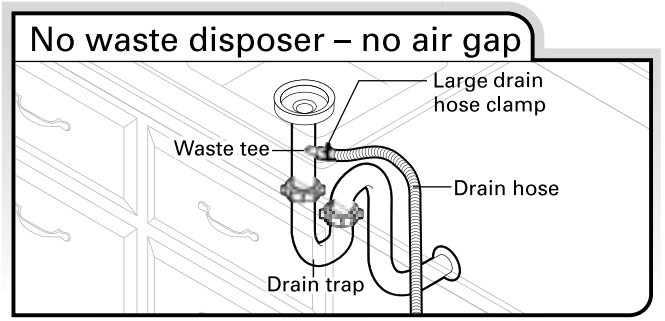

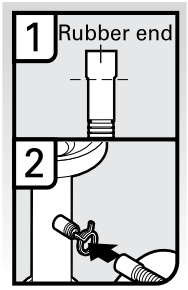

1. Fit rubber end of drain hose to waste tee and cut if needed.

   NOTE: Do not cut ribbed section.
2. Attach rubber end of drain hose to waste tee with a large drain hose clamp (provided). Use pliers to squeeze clamp open and move into position. If the drain hose was cut, use a 1½" to 2" (3.8 to 5 cm) screw-type clamp (not provided).

Option C, Waste Disposer – With Air Gap

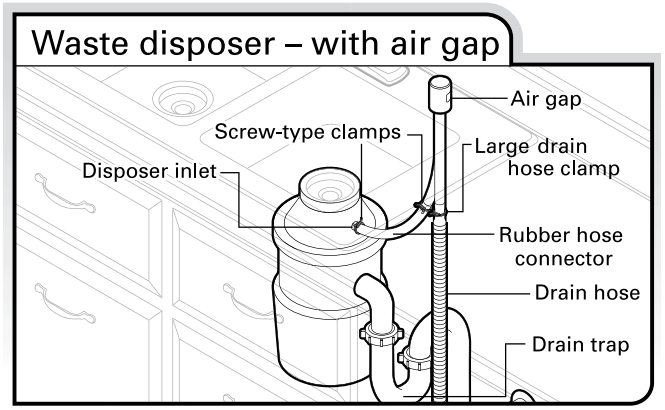

Helpful Tip: Remove disposer knockout plug.

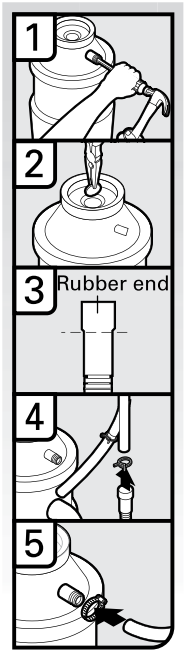

1. Using a hammer and screwdriver, knock plug into disposer.
2. Use needle-nose pliers to remove plug.
3. Connect rubber end of drain hose to air gap and cut if needed.
   NOTE: Do not cut ribbed section.
4. Attach drain hose to air gap with large drain hose clamp (provided). Use pliers to squeeze clamp open and move into position. If the drain hose was cut, use a 1½" to 2" (3.8 to 5 cm) screw-type clamp (not provided).
5. Use a rubber hose (not provided) with screw-type clamps (not provided) to connect from air gap to disposer inlet.

Option D, No Waste Disposer – With Air Gap

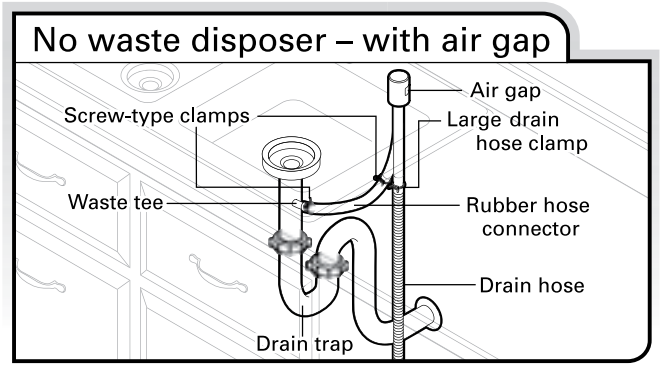

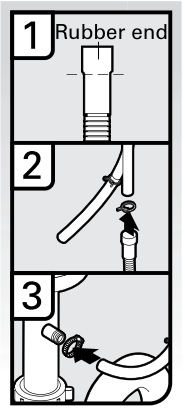

1. Connect rubber end of drain hose to air gap and cut if needed.
   NOTE: Do not cut ribbed section.
2. Attach drain hose to air gap with large drain hose clamp (provided). Use pliers to squeeze clamp open and move into position. If the drain hose was cut, use a 1½" to 2" (3.8 to 5 cm) screw-type clamp (not provided).
3. Use a rubber hose (not provided) with screw-type clamps (not provided) to connect from waste tee to air gap.

Install Optional Moisture Barrier

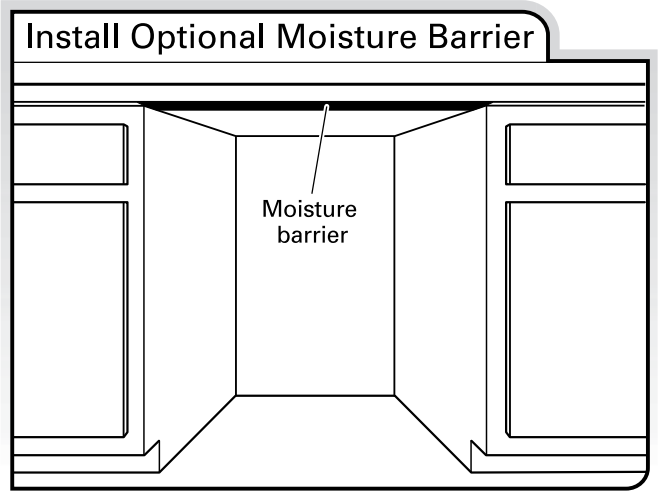

See the “Tools and Parts” section at the front of the guide for part details and orders.

1. Make sure the area under the cabinet is clean and dry for installation of the moisture barrier.
2. Remove the backing of the moisture barrier and apply to underside of the countertop along the front edge of the counter.

Prepare Dishwasher

⚠ WARNING

Tip Over Hazard

Do not use dishwasher until completely installed.

Do not push down on open door.

Doing so can result in serious injury or cuts.

⚠ WARNING

Excessive Weight Hazard

Use two or more people to move and install dishwasher.

Failure to do so can result in back or other injury.

Helpful Tip: Place cardboard under dishwasher until installed in cabinet opening to avoid damaging floor covering.

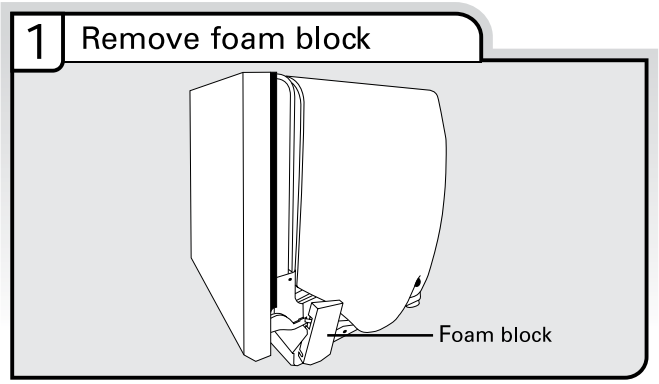

Remove and discard the foam blocks (if blocks are present, not all models have them) located above the front legs on each side of the dishwasher. The blocks cover the rope/link pulleys on the dishwasher.

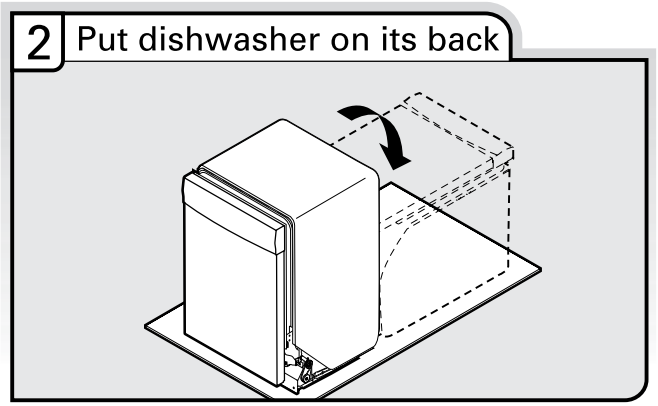

Using 2 or more people, grasp sides of dishwasher door frame and place dishwasher on its back.

Do not use door panel as a worktable without first covering with a towel to avoid scratching the door panel.

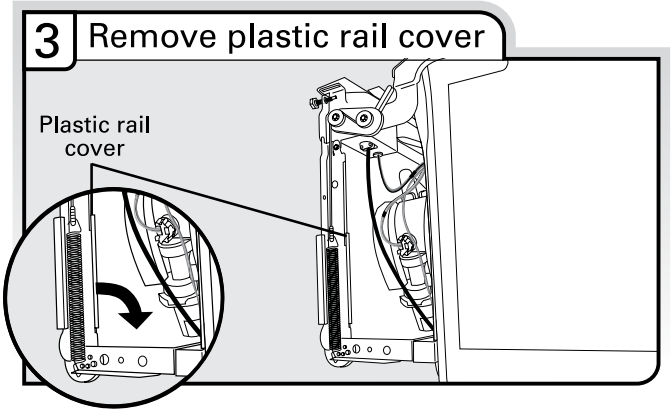

Remove and discard the plastic rail cover on each side of the dishwasher frame. To remove the plastic rail cover, push upward and back to unsnap it from the dishwasher frame.

Option A, Remove Access Panel - Plastic Panel

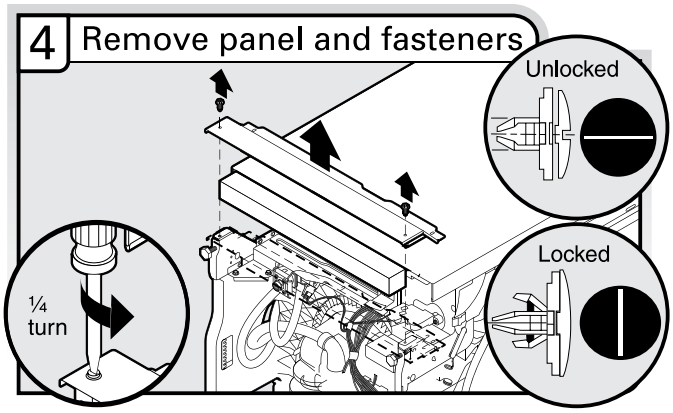

Using a flat-blade screwdriver, turn the plastic fasteners ¼ turn counterclockwise to unlock them. Remove panel. Do not remove tech sheet from access panel.

Option B, Remove Access Panel - Metal Panel

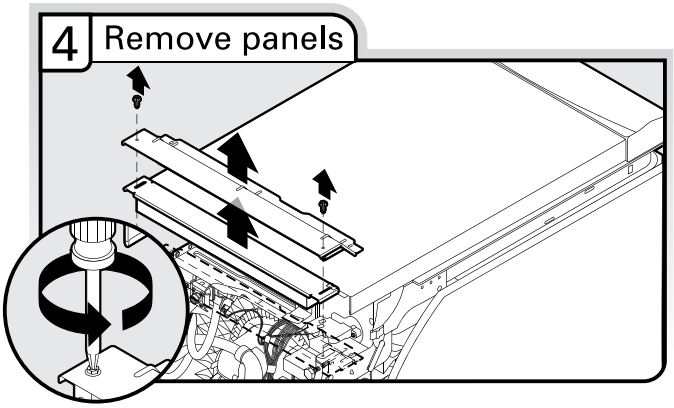

Using a ¼" nut driver or Phillips screwdriver, remove 2 screws attaching access panel and lower panel to dishwasher.

Do not remove tech sheet from access panel.

What type of electrical connection will you use?

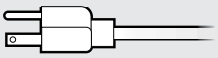

Power Cord:
Follow Option A instructions

Direct Wire:
Follow Option B instructions

NOTE: If using Option B, proceed to "Determine Cabinet Opening," to continue with more of the installation of your dishwasher before making the direct wire connection.

Make Power Cord Connection

Option A, Power Cord

1 Remove terminal box and cover

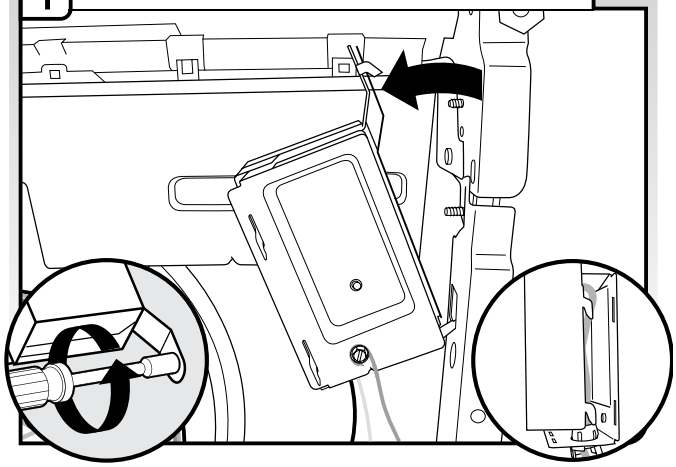

Do not disconnect the green, black, or white dishwasher wires already attached to the terminal box. There should be adequate length in these wires to pull the terminal box out from under the dishwasher if you lift the wires off of the nearby clips or components being used to keep them off the floor.

Use a ¼" nut driver or ¼" hex-head socket wrench to remove the screw that holds the terminal box to the cross brace. Then, tilt the terminal box, free the tab and lift the terminal box away from the crossbar. Remove the cover by sliding it up and lifting its hooks out of the slots. Retain cover for later use.

2 Install strain relief

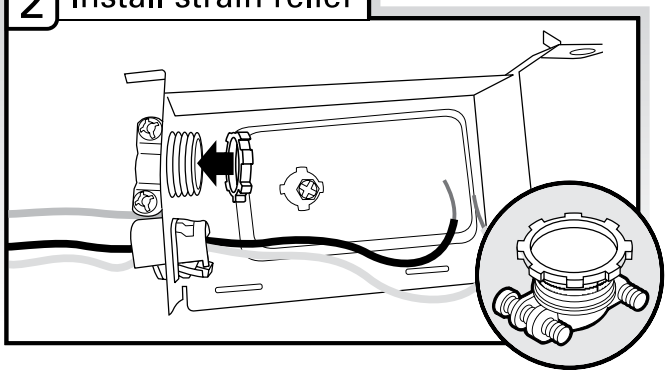

Install a UL Listed/CSA Approved metallic strain relief. Make sure screw heads are facing up when tightening conduit nut. Strain relief is provided with the power cord kit. See the "Tools and Parts" section at the front of the guide for part details and orders.

3 Power Cord—Route cord into terminal box

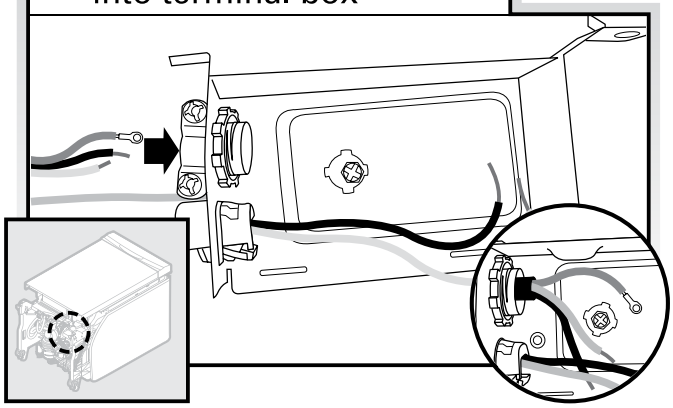

Route cord so that it does not touch dishwasher motor or lower part of dishwasher tub. Pull cord through strain relief in terminal box.

Note: A maximum of two power cord supply conductors (12 AWG largest size) plus one grounding conductor are permitted in the terminal box

⚠ WARNING

Electrical Shock Hazard

Electrically ground dishwasher.

Connect ground wire to green ground connector in terminal box.

Do not use an extension cord.

Failure to follow these instructions can result in death, fire, or electrical shock.

4 Power Cord—Connect ground wire

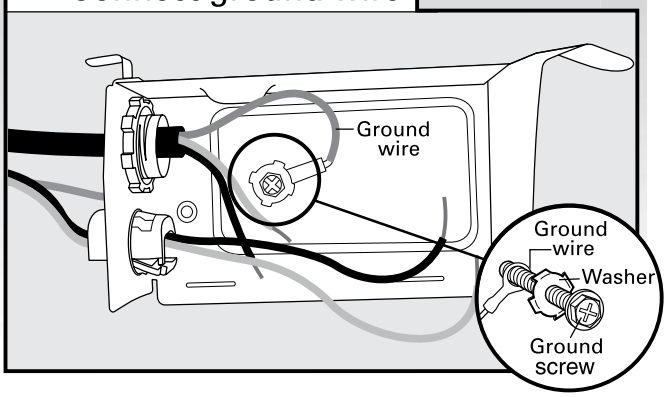

Remove the ground connector screw on the raised floor inside the box and place it through the ring terminal of the green ground wire of power cord. Reattach and tighten the ground connector screw to the raised floor of the box.

5 Power Cord—Connect remaining wires

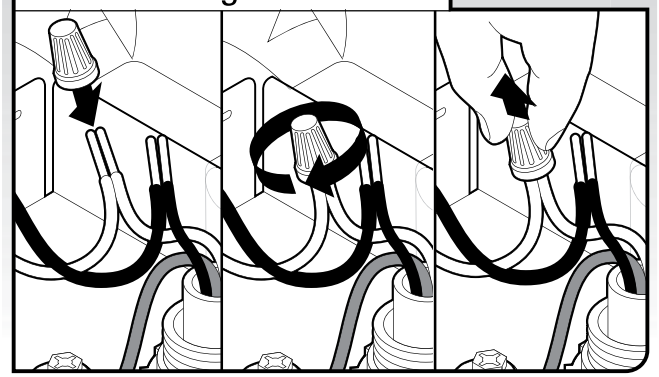

Select UL Listed/CSA Approved twist-on wire connectors of the proper size. See the “Tools and Parts” section at the front of the guide for part details. Connect wires, black to black and white to white, using the twist-on wire connectors.

NOTE: Do not pre-twist stranded wire. Twist on wire connector. Gently tug on wires to be sure both are secured.

Wiring configuration

Power supply wire:		Terminal box wire:
white	↔	white
black	↔	black
ground wire	↔	ground connector

6 Power Cord–Secure cord on strain relief

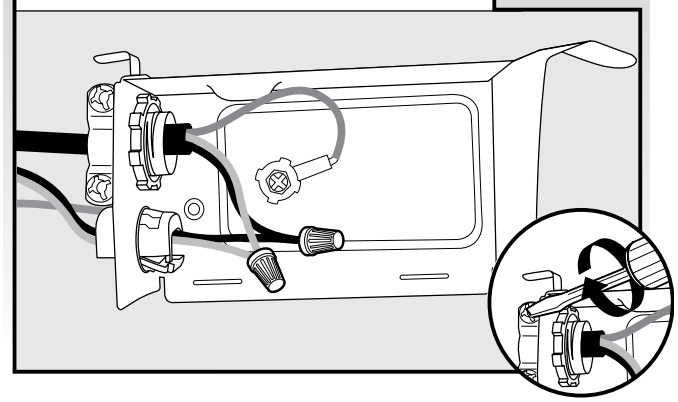

Tighten strain relief screws to secure cord.

7 Power Cord—Reinstall terminal box cover

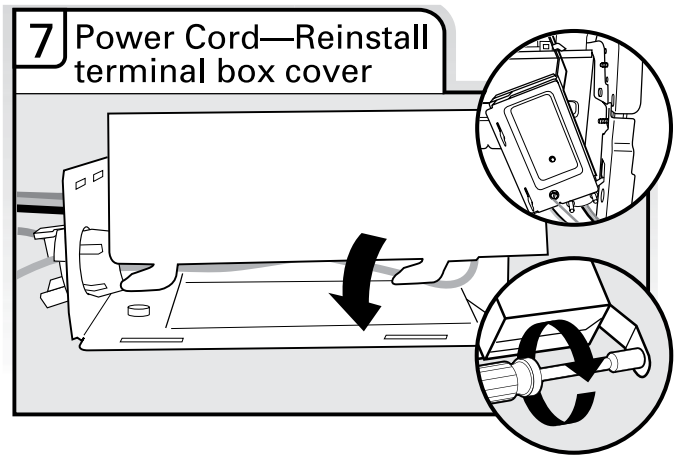

Place wires inside terminal box. Replace the cover by inserting the hooks of the terminal cover into the slots in the floor of the terminal box and sliding the cover tight against the back wall where wires come in. Make sure wires are tucked inside the box and not pinched by the cover.

Then, put the terminal box back on the crossbar with the tab in place. Use a ¼" nut driver and the previously removed screw to secure the terminal box to the crossbar.

NOTE: Do not plug into outlet until instructed to do so.

Once the terminal box has been remounted on the dishwasher, there should be some excess length or slack in the green, black, and white wires coming from the dishwasher to the terminal box. Wrap these wires over the nearby components or clip them back into the nearby clips that they were routed through prior to your removing the box, to help keep them off the floor.

Determine Cabinet Opening

1 Measure cabinet opening

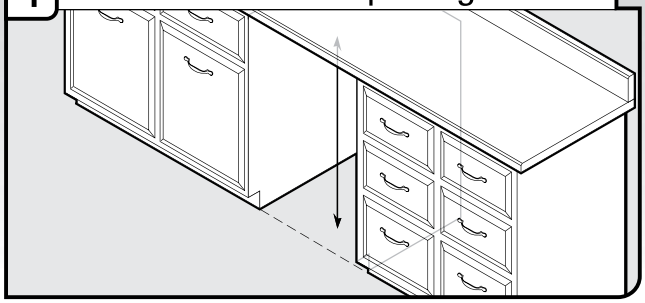

Measure height of cabinet opening from underside of countertop to floor where dishwasher will be installed (you will need to measure the lowest point on the underside of the countertop and the highest point on the floor). Refer to “Dishwasher Height Adjustment Chart” for wheel position and height of front legs needed for your cabinet opening height.

Dishwasher Height Adjustment Chart

Cabinet opening height	Front legs height	Wheel position	Insulation blanket
33½" (85.1 mm)	⅜" (9.8 mm)	Removed	Cut
34" (86.4 cm)	⅞" (22 mm)	1	No cut
34¼" (87.0 cm)	1" (25 mm)	2	No cut
34½" (87.6 cm)	1⅛" (28.8 mm)	3	No cut

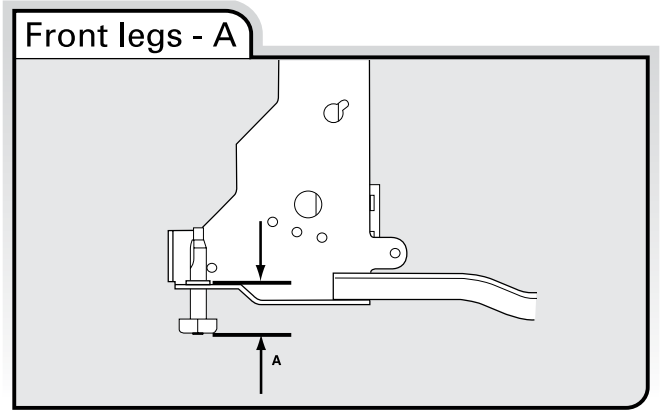

NOTE: If the minimum cabinet opening height is less than 34" (86.4 cm), the rear wheels can be removed for additional clearance. This will allow the dishwasher and perforated section of the insulation blanket to fit into a 33½" (85.1 cm) high cabinet opening, but the dishwasher will be more difficult to move. Measurements are approximate. Wheels and legs are preset at the factory for 34½" (87.6 cm).

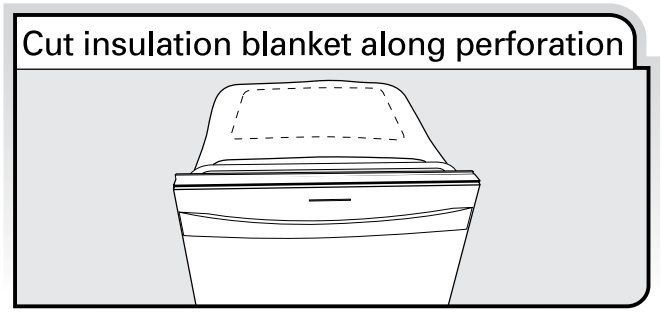

Cut insulation blanket along perforation for cabinet opening height of 33½" (85.1 cm). For other cabinet opening heights, do not cut.

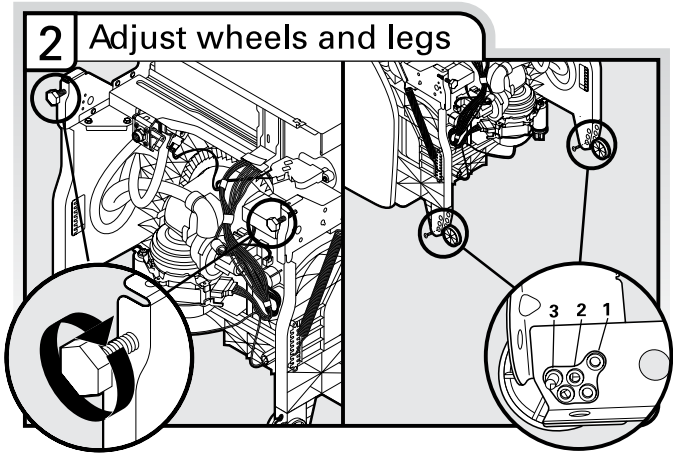

Turn both leveler legs to the same height. Put wheels in the required position determined from “Dishwasher Height Adjustment Chart.”

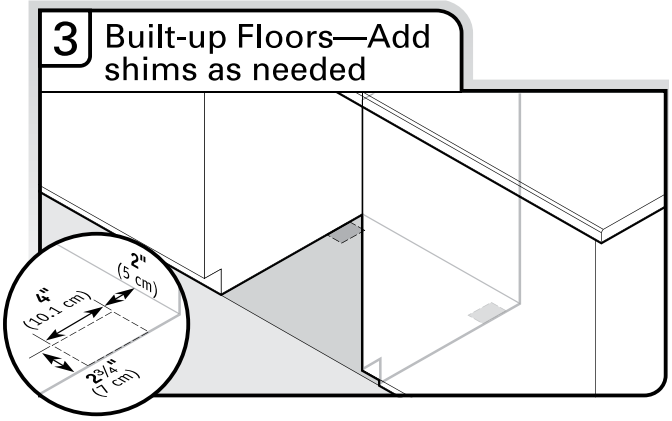

Built-up floors: If the kitchen floor is higher than the cabinet opening's floor - for example, the kitchen floor tile does not extend into the cabinet opening - add shims as needed in the area shown to bring the dishwasher up to 34" (86.4 cm) below the countertop.

NOTE: Shims must be securely attached to floor to avoid movement when the dishwasher is in use.

Install Door Handle
(on some models)

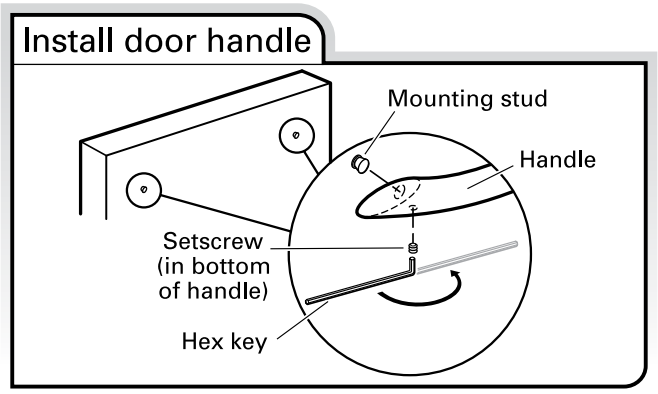

IMPORTANT: Do not scratch the front panel during this procedure.

Remove the door handle and hardware bag containing the setscrews and hex key from the cardboard box. Setscrews are already installed in the handle. Place handle on mounting studs with the setscrews facing down. Push the door handle tightly against the door. Insert the short end of the hex key into the setscrews. Tighten the setscrews ¼ turn past snug.

Retain hex key with Installation Instructions.

⚠ WARNING

Excessive Weight Hazard

Use two or more people to move and install dishwasher.

Failure to do so can result in back or other injury.

Stand dishwasher upright

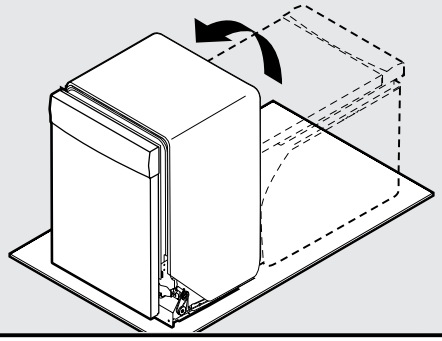

Using 2 or more people, stand the dishwasher up.

NOTE: Do not install kick plate until instructed to do so.

Custom Panel Installation

(Custom Panel models only)

For custom panel installation, refer to the Custom Panel Installation Instruction Sheet (Part Number W10750117A). Complete custom panel installation before proceeding to the "Choose Attachment Option" section.

Choose Attachment Option

IMPORTANT: The dishwasher must be secured to the cabinet as one of the final steps. Prepare the dishwasher for this by attaching the two brackets found in the parts bag to the dishwasher.

For countertops that are wood, laminate, or another similar surface, use Option A.

For countertops that are marble, granite, or another hard surface, use Option B.

Option A, Countertop Attachment

1 Insert bracket

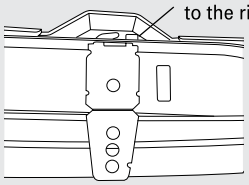

Remove the brackets from the package and insert into the open slots on the left-hand and right-hand top of the dishwasher collar, as shown.

2 Bend tab

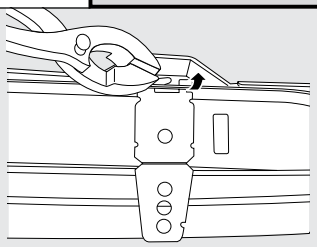

Using a pair of pliers, bend the tab down to secure the bracket in place. Repeat this step for the other side.

NOTE: Do not attach the dishwasher. This will be done later.

Option B, Dishwasher Side Attachment

NOTE: Remove the brackets from the parts package.

1 Break end of bracket

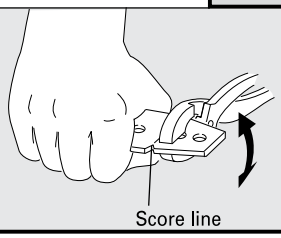

Break off the end of the bracket along the scored line.

With another person holding the rear of the dishwasher to keep it from tipping, open dishwasher door and place towel over pump assembly and spray arm of dishwasher. This will keep screws from falling into pump area when you are securing dishwasher to cabinet.

2 Remove plastic buttons

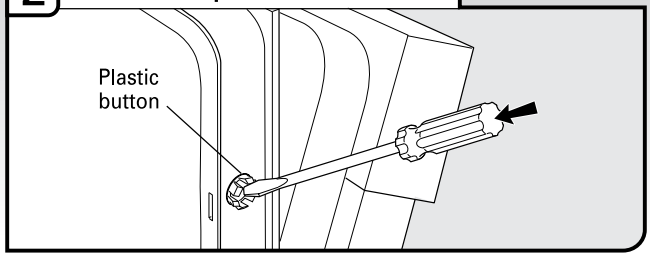

Push the plastic buttons out of the side of the tub.

NOTE: Save the buttons to cover the holes after dishwasher is installed.

3 Install bracket

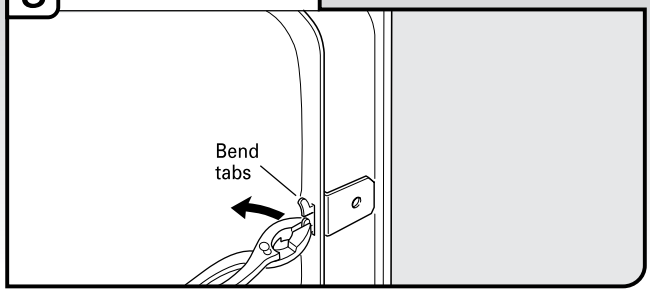

Push bracket into slot on the side of dishwasher, and bend tab in toward the side of the dishwasher so that it keeps the bracket in place. Repeat this step for the other side of the dishwasher.

NOTE: Do not attach the dishwasher. This will be done later.

Prepare Water Supply Line

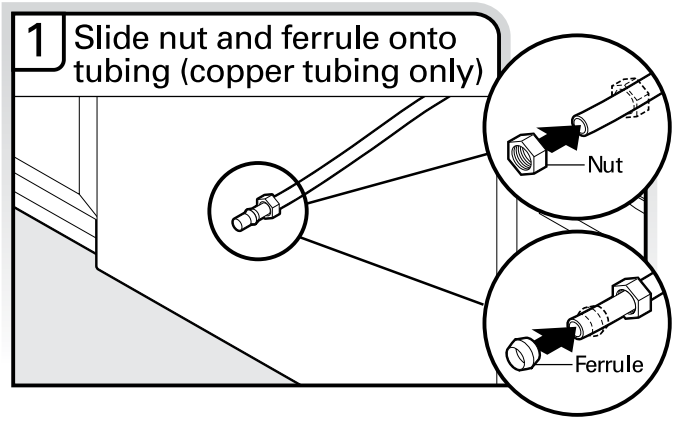

Copper tubing only: Slide nut, and then ferrule about 1" (2.5 cm) onto copper tubing.

NOTE: To avoid vibration during operation, route the water supply line so that it does not touch the dishwasher base, frame or motor.

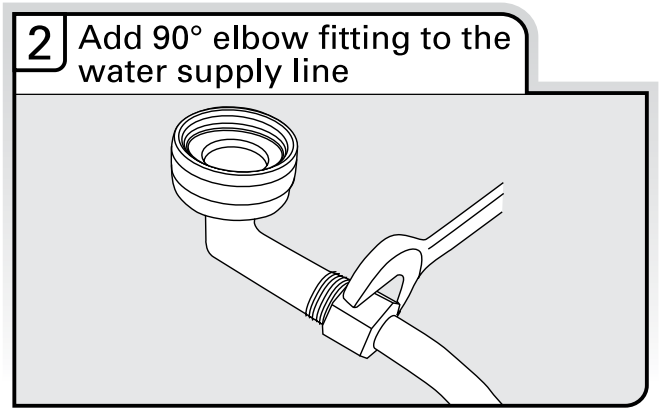

Get ⅜" compression x ¾" hose fitting with 90-degree elbow. See the “Tools and Parts” section at the front of the guide for part details and orders. Connect the ⅜"compression fitting of the 90° elbow to the water supply line prior to installing the unit into the cabinet opening. Attach such that the ¾" connection is facing upward, as shown above.

Copper tubing only: Put the tubing into the 90° elbow fitting as far as it will go (the copper tubing bends and kinks easily). Slide the nut and ferrule forward, and then start the nut onto the elbow threads.

Flexible braided connection: Secure nut to elbow using ⅝" open ended wrench or adjustable wrench.

NOTE: Do not use Teflon®† tape with compression fittings.

†®TEFLON is a registered trademark of E.I. Du Pont De Nemours and Company.

Move Dishwasher Close to Cabinet Opening

⚠ WARNING

Excessive Weight Hazard

Use two or more people to move and install dishwasher.

Failure to do so can result in back or other injury.

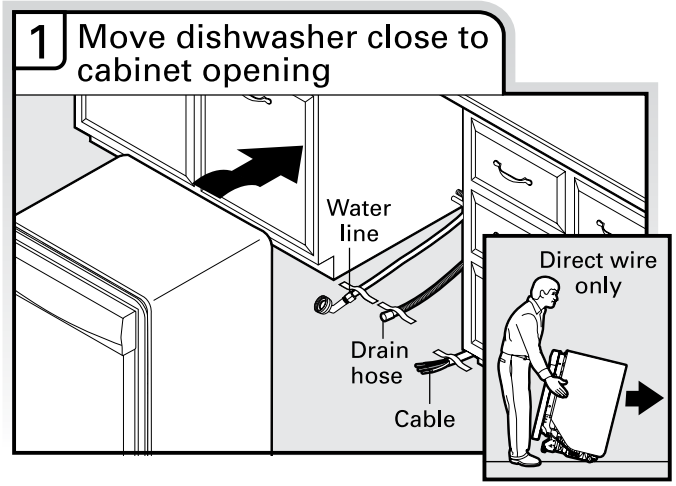

Use 2 or more people to move and install dishwasher.

IMPORTANT: Double-check correct placement of utilities. Grasp the sides of the dishwasher at the edges of the door panel. Tilt dishwasher backward on wheels and move dishwasher close to cabinet opening.

NOTE: Do not push on the front of the panel or on the console. Panel or console may dent.

Helpful Tip: Temporarily tape utilities to the floor in the locations shown to prohibit them from moving when dishwasher is moved into the cabinet opening.

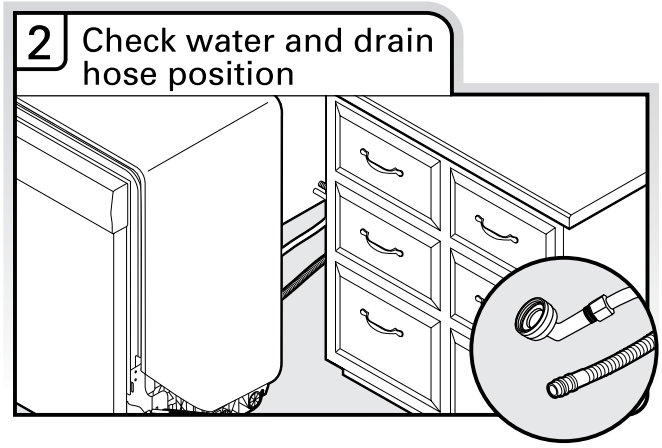

Check that water line is on the left-hand side of opening and drain hose is near the center of the cabinet opening.

3 Open and close door

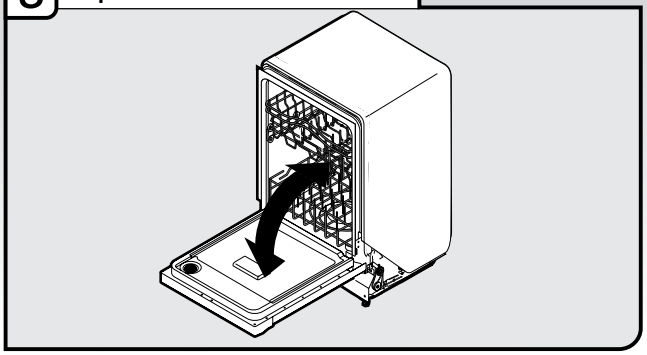

With another person holding the dishwasher to keep it from tipping, open and close the door a few times. If the door closes or falls open under its own weight, the door tension will need to be adjusted.

4 Closes too quickly— Decrease spring tension

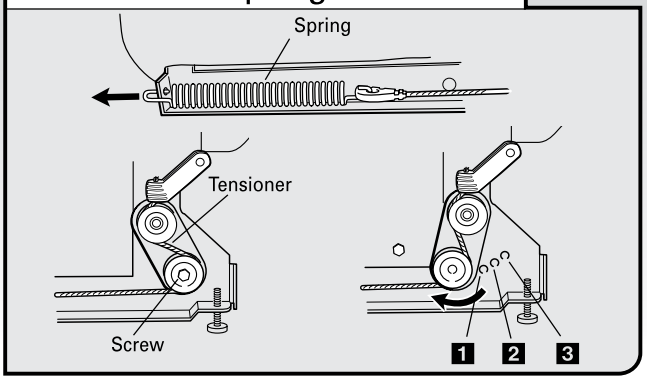

To adjust the door spring tension, unhook the spring from the rear leg of dishwasher.

Using a 5⁄16" nut driver or hex socket, remove the screw from the tensioner.

The screw can be put into one of 3 holes (1, 2, 3) in the front leg of dishwasher. If the door closes by itself, move the tensioner to a lower-numbered hole and replace screw. Reattach door spring to rear leg.

NOTE: Tensioners on both sides of dishwasher should be secured at same holes.

5 Door falls open— Increase spring tension

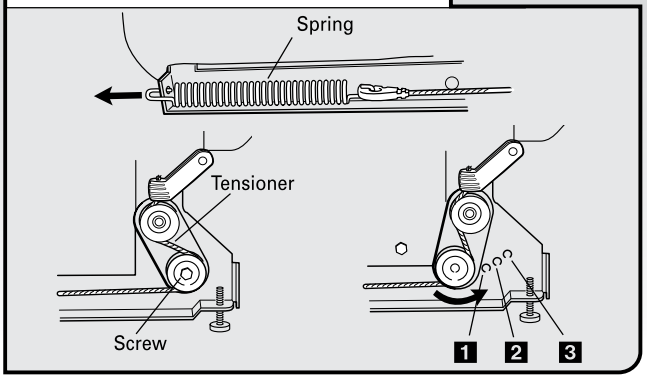

When door is unlatched, if door opens by itself, move the tensioner to a higher-numbered hole and replace the screw. Reattach door spring to rear leg.

NOTE: Tensioners on both sides of dishwasher should be secured at same holes.

6 Move dishwasher into cabinet opening

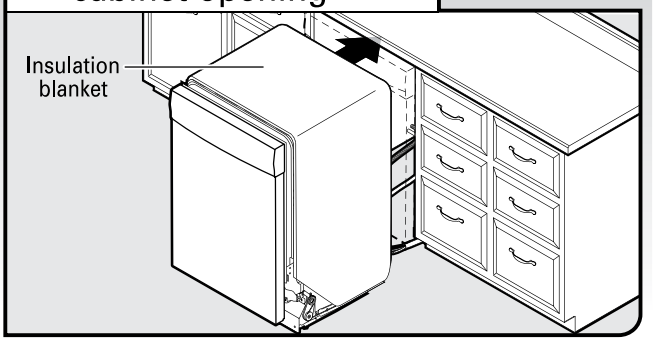

IMPORTANT: If wheels were removed, cover the floor when moving the dishwasher. Slowly move dishwasher completely into cabinet opening. Do not kink or pinch water line, drain hose, power cord or direct wire between dishwasher and cabinet. Remove cardboard from under dishwasher.

NOTES:

- It is all right if dishwasher fits tightly into cabinet opening. Do not remove insulation blanket – the blanket reduces the sound level.
- If using power cord, make sure to route end through hole in cutout before sliding dishwasher into cabinet opening.
- For models with water softener, make sure that the drain hose stays on the hanger that is on the right-hand side and is tucked in on the side of the unit.

7 Align front of dishwasher with front of cabinet doors

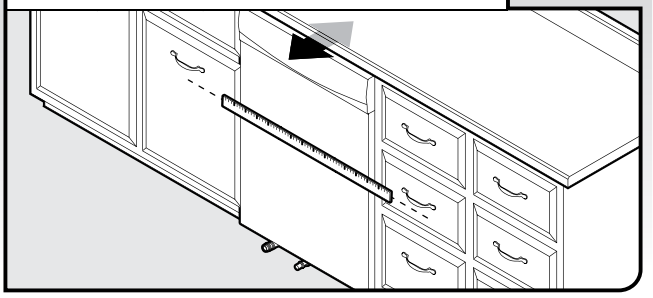

Align front of dishwasher door panel with front of cabinet doors. You may need to adjust alignment to be even with your cabinets.

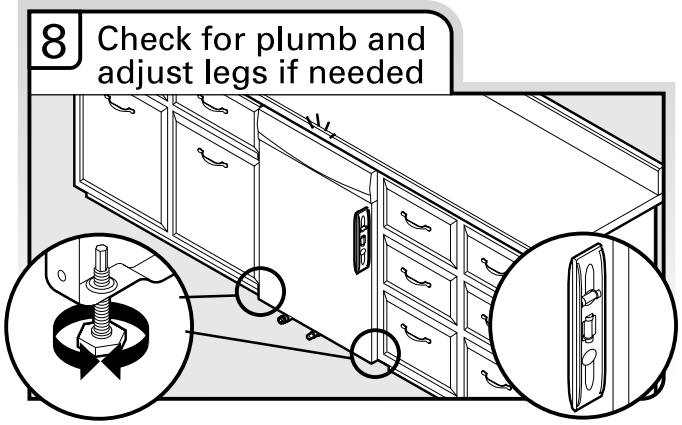

Check that leveling legs are firmly against the floor. Close and latch the door, and place level against the front panel. Check that dishwasher is centered from front to back in the opening. If needed, adjust leveling leg until dishwasher is plumb. Repeat for other side of dishwasher.

Helpful Tip: Push up on front of dishwasher to raise dishwasher off the ground to adjust front legs. With some installations, it may be easier to adjust the front leg using the 3⁄16" hex-head socket or adjustable wrench.

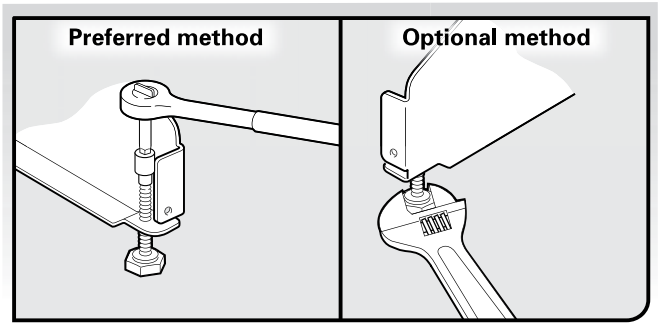

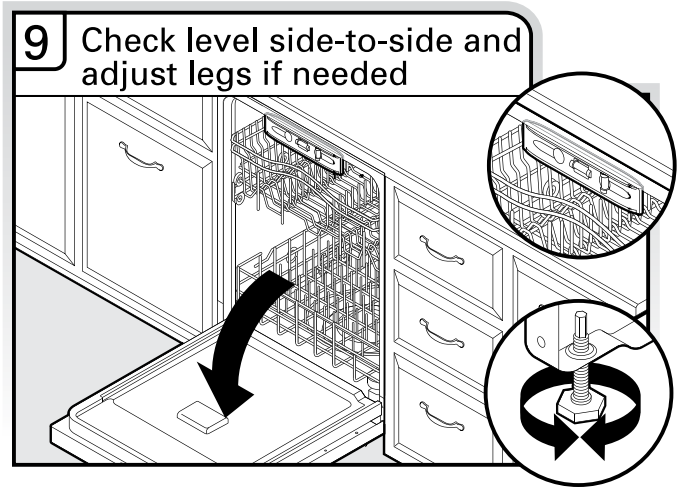

Place level against top front opening of tub. Check that dishwasher is level from side-to-side. If dishwasher is not level, adjust front legs up or down until dishwasher is level.

Connect to Water Supply

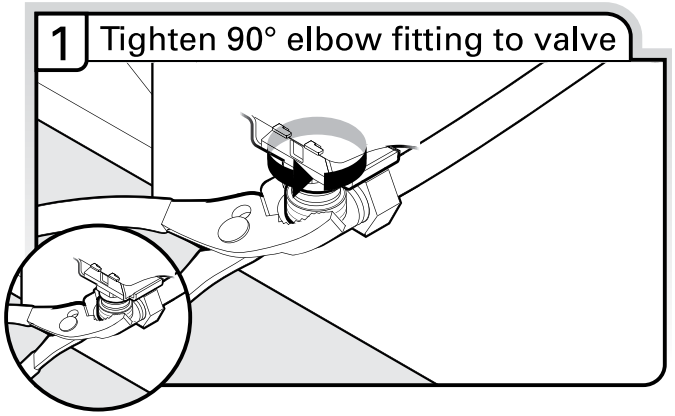

Be sure rubber washer is properly seated in fitting. Slide the ¾" fitting of the 90° elbow up to the valve and hand tighten to avoid cross-threading. Hand tighten until the coupling is tight.

Using pliers, check the tightness of the coupling. An additional ¼ to ½ turn may be required to seal the rubber gasket.

NOTE: Do not over tighten. Damage to the coupling can result.

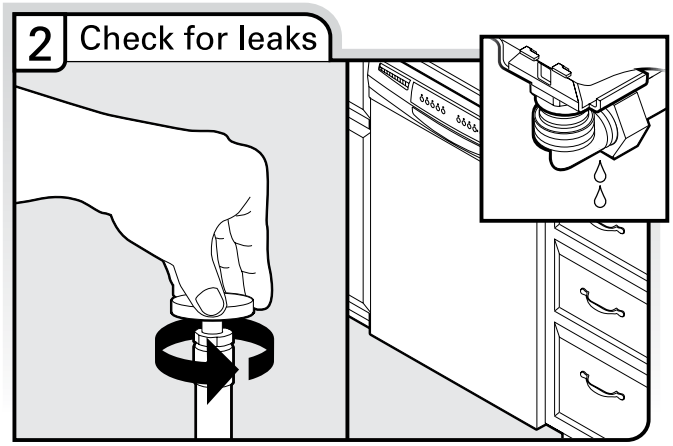

Place paper towel under 90° elbow fitting. Turn on water supply and check for leaks. If leak occurs, repeat previous step.

NOTE: Do not use Teflon®† tape with compression fittings.

Connect to Drain

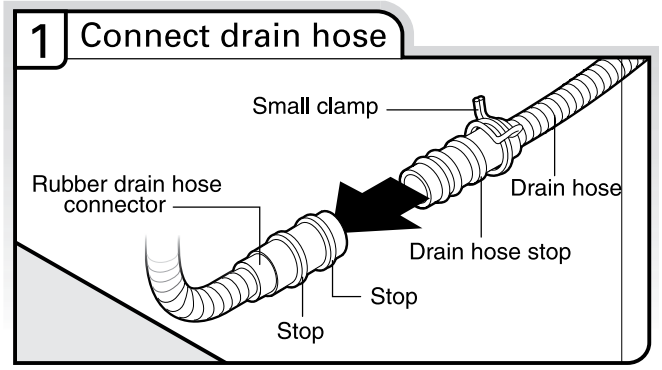

Place towel under drain hose to catch any water in drain hose. Place the small drain hose clamp onto the small end of the drain hose. Push the new drain hose into the rubber drain hose connector up to the drain hose stop.

†®TEFLON is a registered trademark of E.I. Du Pont De Nemours and Company.

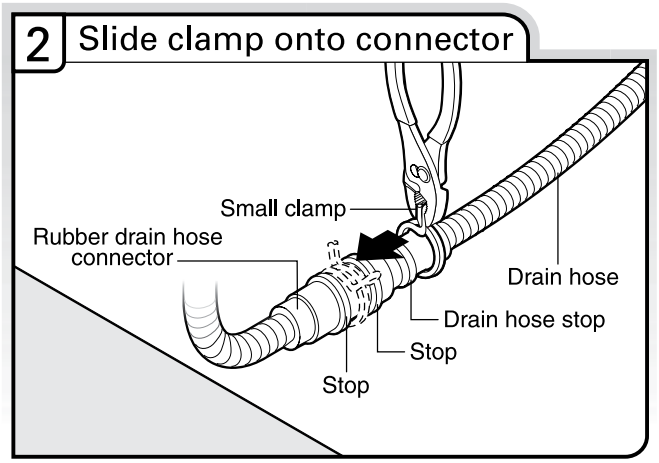

Using pliers, squeeze open the small drain hose clamp and slide onto connector between stops.

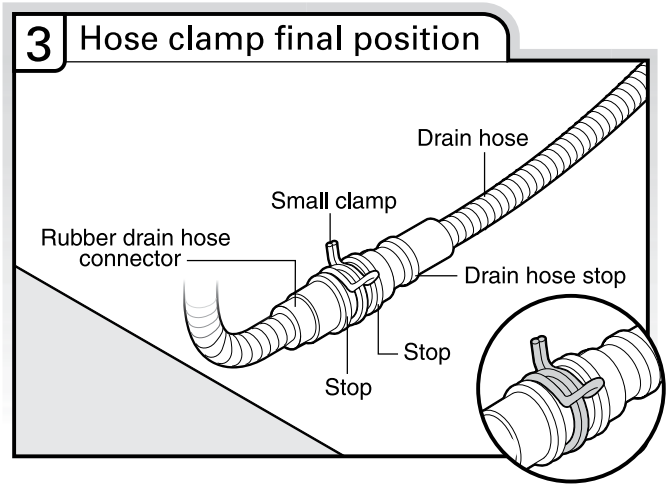

After hose is connected, remove towel.

Make Direct Wire Electrical Connection

NOTE: If the power cord was connected earlier, proceed to "Secure Dishwasher in Cabinet Opening" section.

Option B, Direct Wire

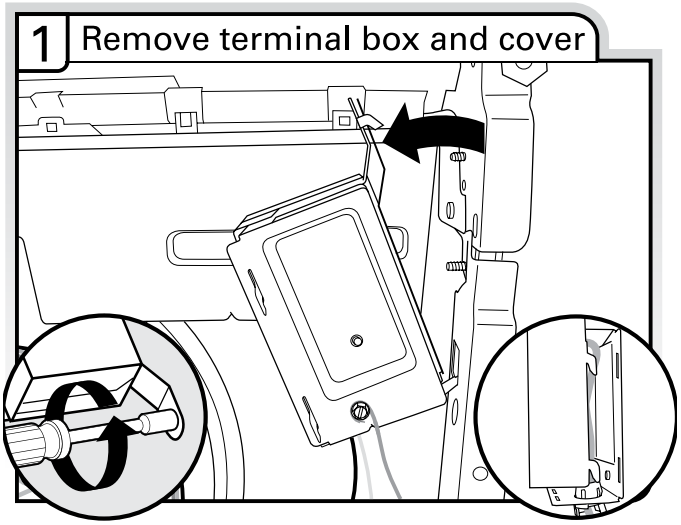

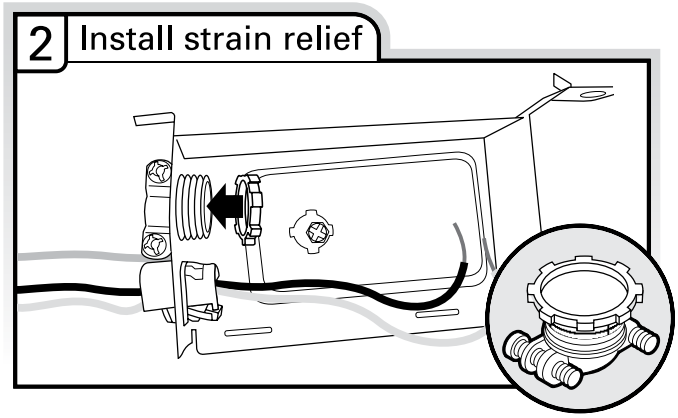

Install a UL Listed/CSA Approved metallic strain relief. See the "Tools and Parts" section at the front of the guide for part details and orders.

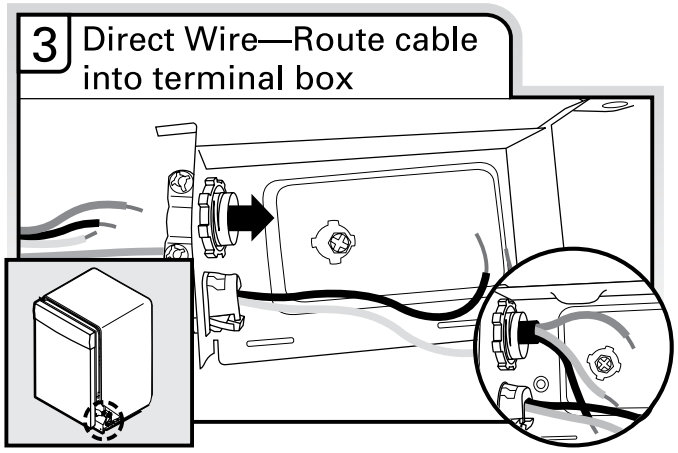

Route cable so that it does not touch dishwasher motor or lower part of dishwasher tub. Pull cable through UL Listed/CSA Approved strain relief in terminal box.

Note: A maximum of two field wiring supply conductors (12 AWG largest size) plus one grounding conductor are permitted in the terminal box.

⚠ WARNING

Electrical Shock Hazard

Electrically ground dishwasher.

Connect ground wire to green ground connector in terminal box.

Do not use an extension cord.

Failure to follow these instructions can result in death, fire, or electrical shock.

4 Direct Wire—Connect ground wire

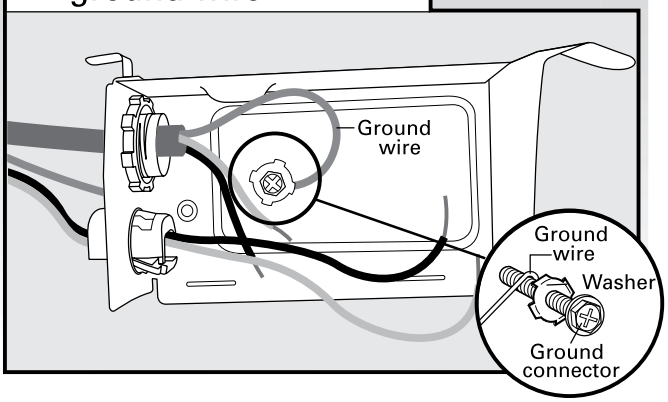

Form bare ground wire into a U-shaped hook. Wrap ground wire hook clockwise around the ground connector screw on the raised floor inside the box and under the washer. Securely tighten ground connector.

5 Direct Wire—Connect remaining wires

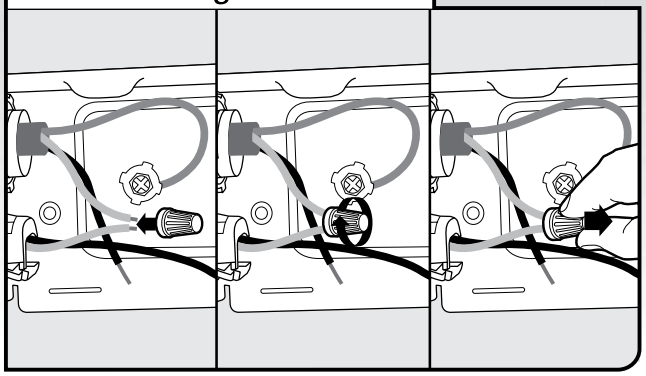

Select UL Listed/CSA Approved twist-on wire connectors of the proper size. See the “Tools and Parts” section at the front of the guide for part details. Connect wires, black to black and white to white, using the twist-on wire connectors.

NOTE: Do not pre-twist stranded wire. Twist on wire connector. Gently tug on wires to be sure both are secured.

Wiring configuration

Power supply wire:		Terminal box wire:
white	⟷	white
black	⟷	black
ground wire	⟷	ground connector

6 Direct Wire—Secure cable in strain relief

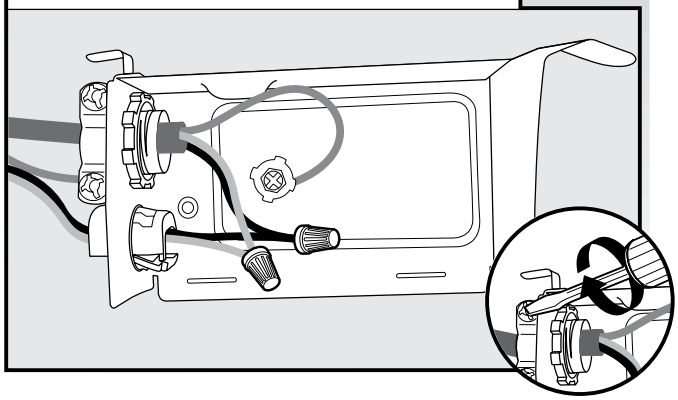

Tighten strain relief screws to secure cable. Make sure screw heads are facing up when tightening conduit nut.

7 Direct Wire—Reinstall terminal box cover

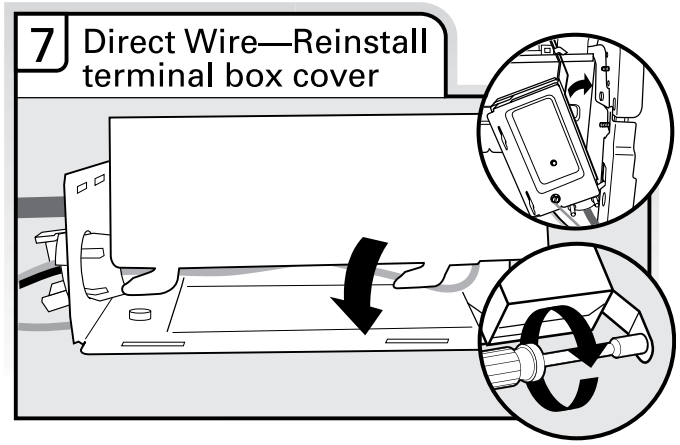

Place wires inside terminal box. Replace the cover by inserting the hooks of the terminal cover into the slots in the floor of the terminal box and sliding the cover tight against the back wall where wires come in. Make sure wires are tucked inside the box and not pinched by the cover. Then, put the terminal box back on the crossbar with the tab in place. Use a ¼" nut driver and the previously removed screw to secure the terminal box to the crossbar.

Once the terminal box has been remounted on the dishwasher, there should be some excess length or slack in the green, black, and white wires coming from the dishwasher to the terminal box. Wrap these wires over the nearby components, or clip them back into the nearby clips that they were routed through prior to your removing the box, to help keep them off the floor.

Secure Dishwasher in Cabinet Opening

1 Double-check dishwasher alignment in cabinet opening

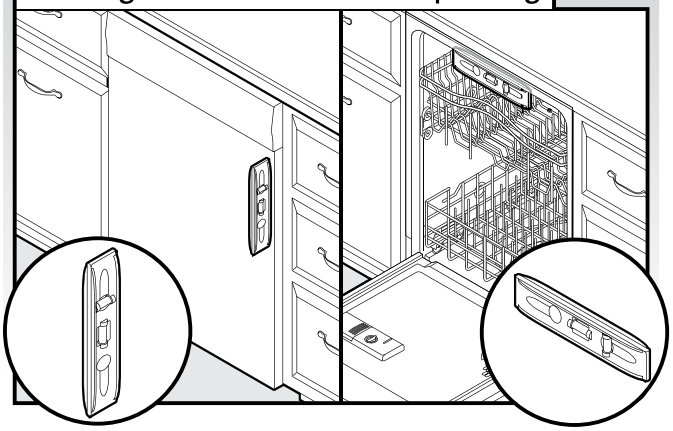

Check that dishwasher is still level front-to-back and side-to-side in cabinet opening.

2 Secure dishwasher

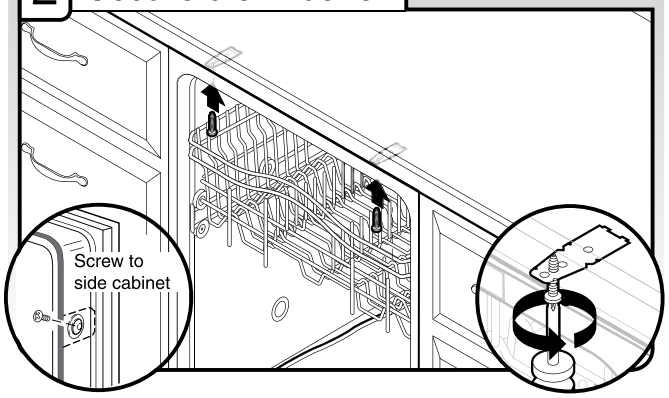

Open dishwasher door to prepare for securing the dishwasher to the cabinet.

NOTES:

- The dishwasher must be secured to keep it from shifting when the door is opened.
- Do not drop screws into bottom of dishwasher.

Option 1 - Secure Dishwasher To Countertop.

- Locate brackets installed on top of dishwasher (during Choose Attachment Method)
- Secure dishwasher to countertop with two, #10 x ½" Phillips-head screws (included).

Option 2 - Side Mount Dishwasher To Cabinet.

- Locate brackets installed on sides of dishwasher (during Choose Attachment Method).
- Drill pilot holes in cabinet to avoid splitting the wood.
- Secure dishwasher to cabinet with two, #10 x ½" Phillips-head screws (included).

3 Check inner spacing

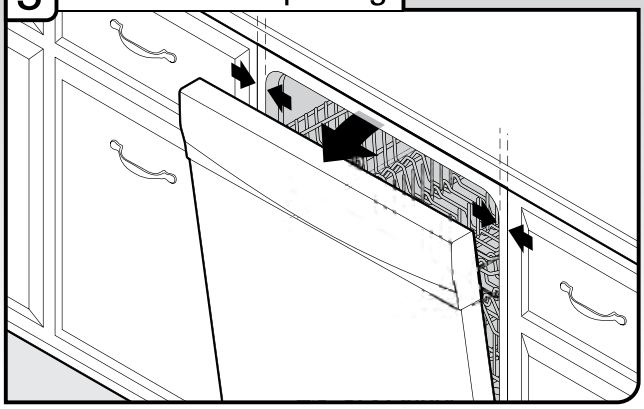

Open door and check that space between dishwasher cabinet opening and tub is equal on both sides. If spacing is not equal, loosen bracket screws and shift tub. Tighten bracket screws

4a Check door clearance – Option 1 attachment method

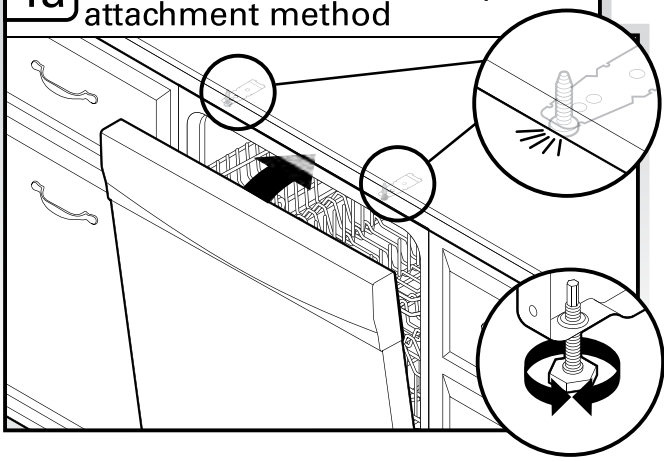

Check that top of door does not contact screws, brackets or countertop. If it does, adjust leveling legs.

4b Check door clearance – Option 2 attachment method

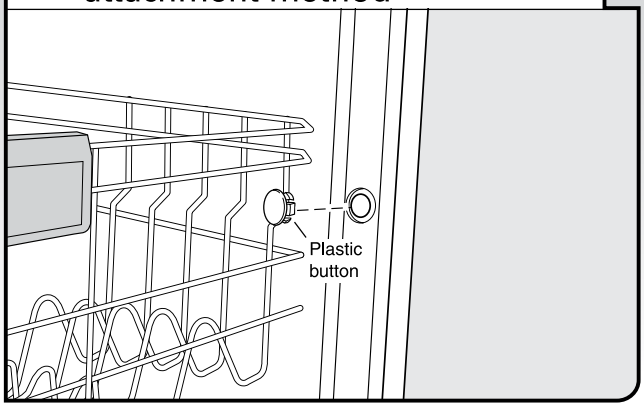

If securing with a side attachment, check that sides of door do not rub against the screw heads. If they do, dishwasher must be re-centered. When dishwasher is properly centered, replace plastic buttons.

Complete Installation

Check that power supply wire or cord does not touch dishwasher motor or lower part of dishwasher tub.

Option A, Install Access Panel - Plastic Panel

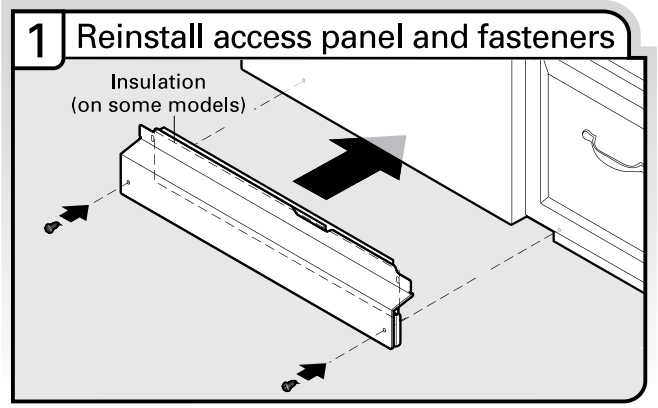

Place the plastic access panel against the dishwasher leg.

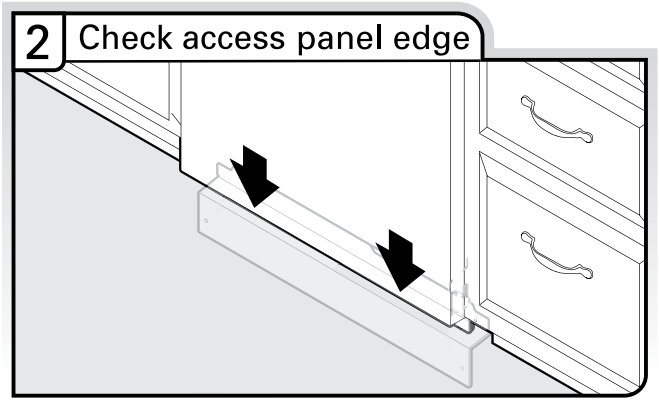

Check that the lower edge of the access panel touches the floor. Adjust if necessary.

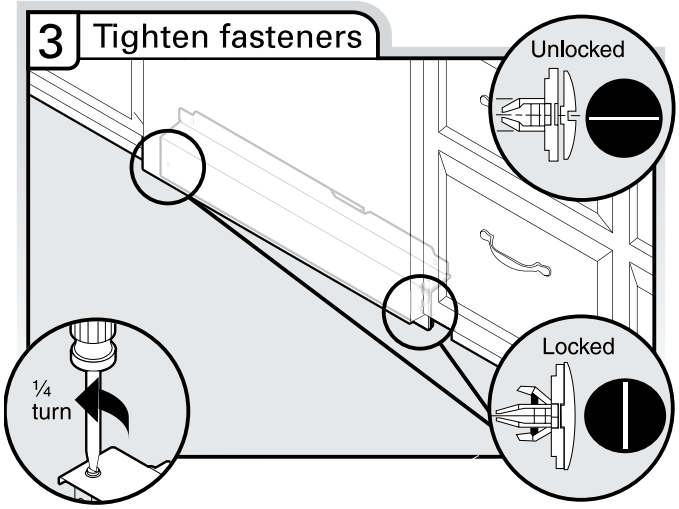

Using a flat-blade screwdriver, turn the fasteners ¼ turn clockwise to lock into place. The fasteners slot will be straight up and down when properly locked.

Option B, Install Access Panel - Metal Panel

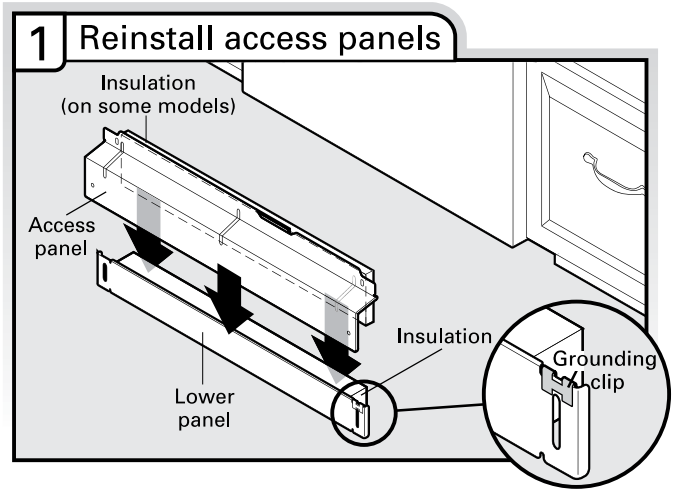

Check that grounding clip is attached to the lower panel. Position the lower panel behind the access panel. On some models there is insulation on the access panel that must fall behind the insulation on the lower panel.

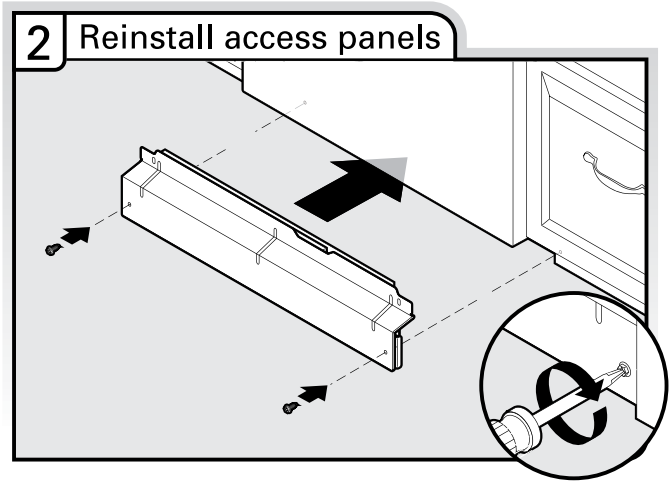

Hold the 2 panels together and place them against dishwasher leg. Using a Phillips screwdriver or ¼" nut driver, reinstall the screws through the holes in the access panel, and the slots in the lower panel.

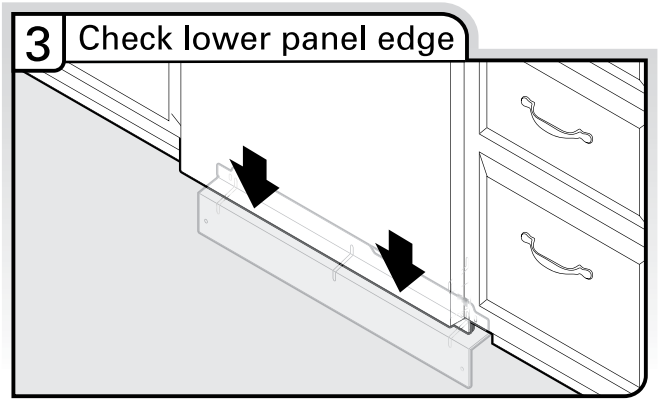

Check that the lower edge of the lower panel contacts the floor. Adjust if necessary.

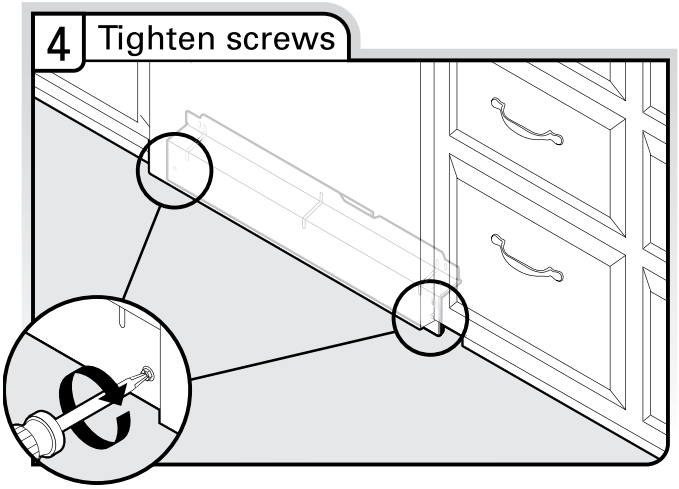

Tighten access panel screws.

⚠ WARNING

Electrical Shock Hazard

Plug into a grounded 3 prong outlet.

Do not remove ground prong.

Do not use an adapter.

Do not use an extension cord.

Failure to follow these instructions can result in death, fire, or electrical shock.

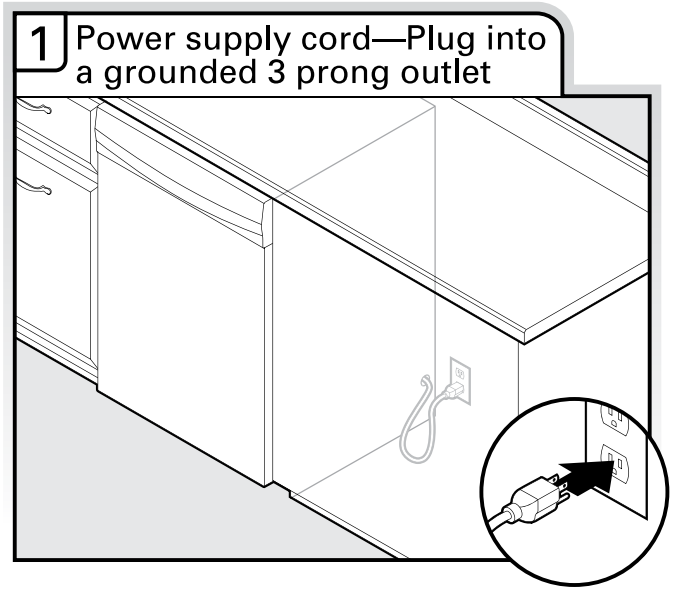

Plug into a grounded 3 prong outlet.

Reconnect Power

1 Reconnect power

Reconnect electrical power at the fuse box or circuit breaker box.

Check Operation

- Read the Dishwasher User Guide that came with your dishwasher.
- Check that all parts have been installed and no steps were skipped. Check that you have all tools used.
- Start dishwasher and allow it to complete the shortest wash cycle. After the first 2 minutes, unlatch door, wait 5 seconds, then open door. Check that there is water in the bottom of the dishwasher tub. Check that dishwasher is working properly.

If the dishwasher is not working properly, disconnect power or unplug dishwasher and See the “If Dishwasher Does Not Operate” section.

If Dishwasher Does Not Operate

First try the solutions suggested here to possibly avoid the cost of a service call.

- Has the circuit breaker tripped or the house fuse blown?
- Is the door closed tightly and latched?
- Has the cycle been set correctly to start the dishwasher?
- Is the water turned on?

If none of these possible solutions work, please see the User Guide for service contact information.

Additional Tips

Expect longer wash times. Your new dishwasher will average 2 to 3 hours per load, but use nearly 40% less energy than older models. Designed with a low wattage, low energy consumption motor, your dishwasher washes longer to ensure exceptional cleaning. Certain models are equipped with an optical water sensor so the first cycle will run longer to calibrate to optical sensor. Selecting certain options could increase cycle time past 3.5 hours.

Rinse aid is necessary for good drying results:
This dishwasher is designed to be used with rinse aid for good drying performance and controlling hard water deposit buildup. Energy efficient dishwashers use less water and energy, so they depend on the water sheeting action of rinse aid for good drying performance.

Start/Resume indicator light may flash:
When pressing Start/Resume, you must make sure the door is closed within 3 seconds. If you do not close the door within 3 seconds, the Start/Resume indicator light will flash until you press it again. (You must also do this when adding a dish during the middle of a cycle.)

Multimedia Enhanced

Section 4: Component Access

This section provides service parts access, removal, and installation instructions for the "KitchenAid 2015 Microfiltration Dishwashers."

- Insulation Blanket
- Door Latch Strike
- Door Spring Adjustment
- Water Inlet & Drain Hose
- Advanced ProDry™ (Side Dry)
- Overfill Assembly
- Interior LED Lighting
- Accessing Door Components
- Removing User Interface
- Removing Latch Assembly
- Removing Dispenser Assembly
- In Tub Components
- Spray Arms, Feed Tube, and Manifold
- Removing the Racks
- Removing the Lower Spray Arm
- Removing ProScrub® Manifold & Feed Tube
- Removing Diverter Disk
- Under Tub Components
- Removing Electronic Control
- Removing Heater Assembly
- Removing Drain Pump & Sump Assembly
- Removing Optical Water Indicator
- Removing Diverter Assembly
- Microfiltration Wash System Parts
- Removing Wash Motor & Rotating Inlet Filter

Video Available Look for this ICON throughout Section 4

Insulation Blanket and Door Latch Strike

⚠ WARNING

Electrical Shock Hazard

Disconnect power before servicing.

Replace all parts and panels before operating.

Failure to do so can result in death or electrical shock.

Installing Insulation Blanket

(Stainless Steel Tub Models Only)

1. Fasten the blanket on the hooks located on each side of the tub, (see Figures 1 and 2).

Figure 1

Figure 2

Removing Door Latch Strike

1. Open the dishwasher door.
2. Depress the 2 outside bars and pull out the latch, (see Figures 1, 2 and 3).

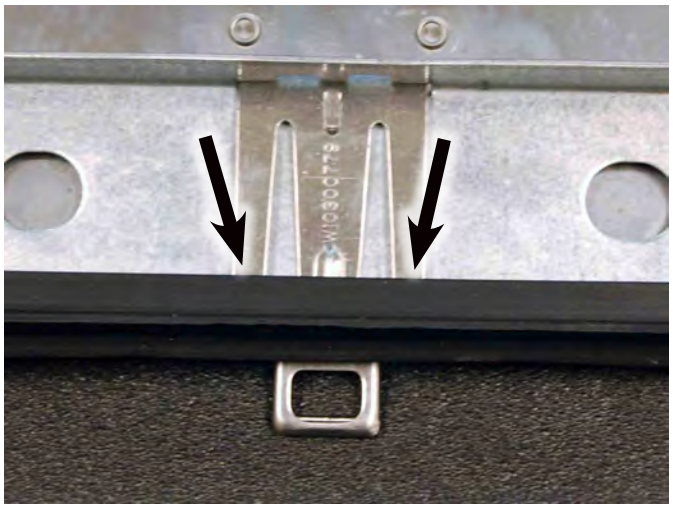

Figure 1

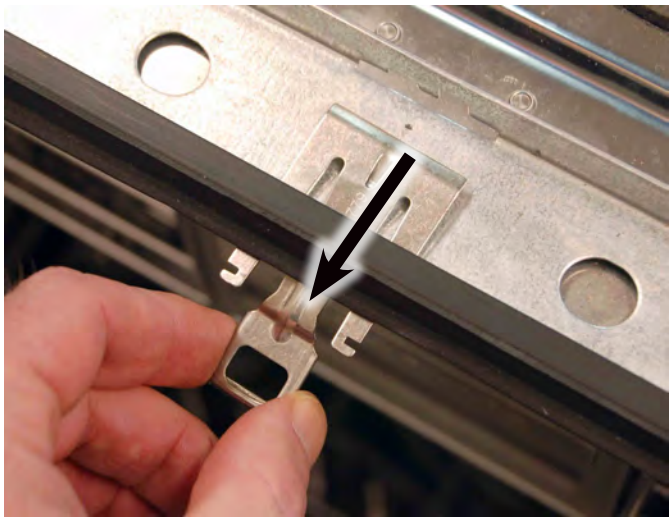

Figure 2

Figure 3

Adjustable Door Springs, Wheels, Water Inlet and Drain Hose

⚠ WARNING

Electrical Shock Hazard

Disconnect power before servicing.

Replace all parts and panels before operating.

Failure to do so can result in death or electrical shock.

Door Spring Adjustment

1. Unplug dishwasher or disconnect power.
2. Remove the dishwasher from the installation.
3. With another person holding the dishwasher to keep it from tipping, open and close the door a few times. IF the door closes or falls open under its own weight, the door tension will need to be adjusted.
4. To adjust the door spring tension, unhook the spring from the rear leg of dishwasher. See figure 1.
5. Using a 5/16” nut driver or hex socket, remove the screw from the tensioner.
6. The screw can be put into one of 3 holes (1, 2, 3) in the front leg of dishwasher, see figure 1. If the door closes by itself, move the tensioner to a lower-numbered hole and replace screw.
7. Reattach door spring to rear leg.

NOTE: Tensioners on both sides of dishwasher should be secured at same holes.

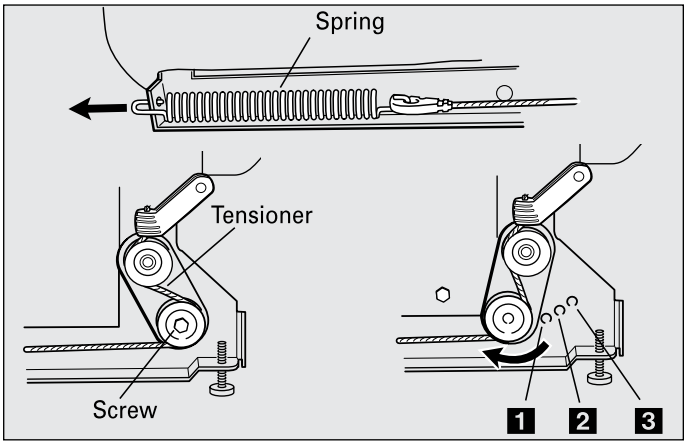

Figure 1

Water Inlet and Drain Hose

Drain loop must be higher than drain to prevent siphoning.

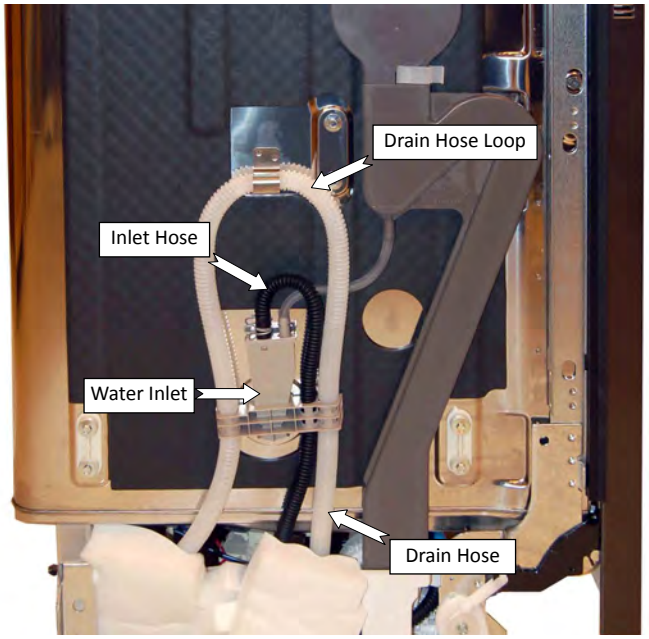

Figure 1

Water Inlet Components

Figure 2

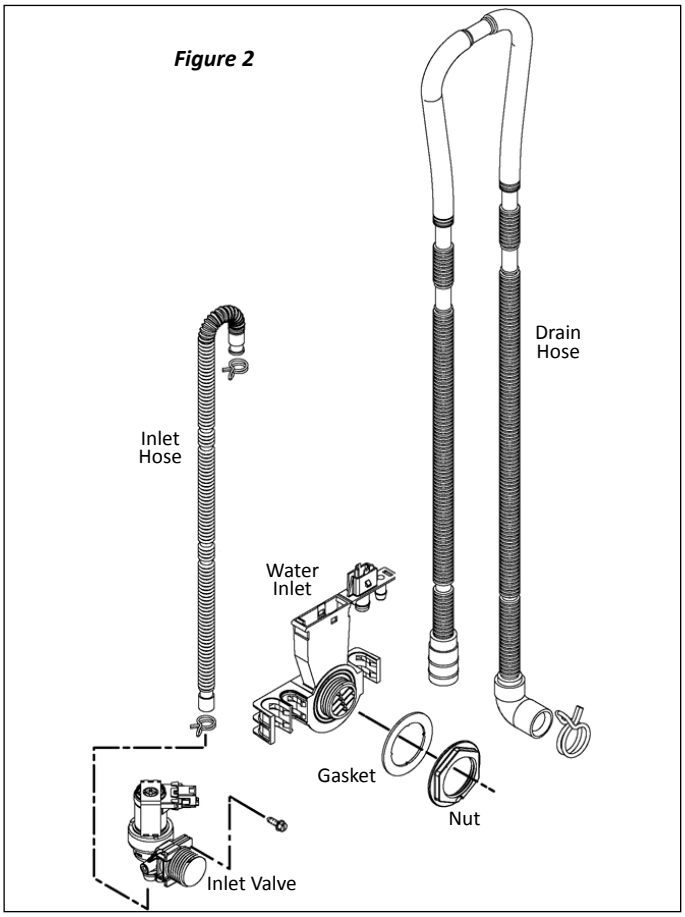

Advanced ProDry™ (Side Dry)

⚠ WARNING

Electrical Shock Hazard

Disconnect power before servicing.

Replace all parts and panels before operating.

Failure to do so can result in death or electrical shock.

Advanced ProDry™ Components

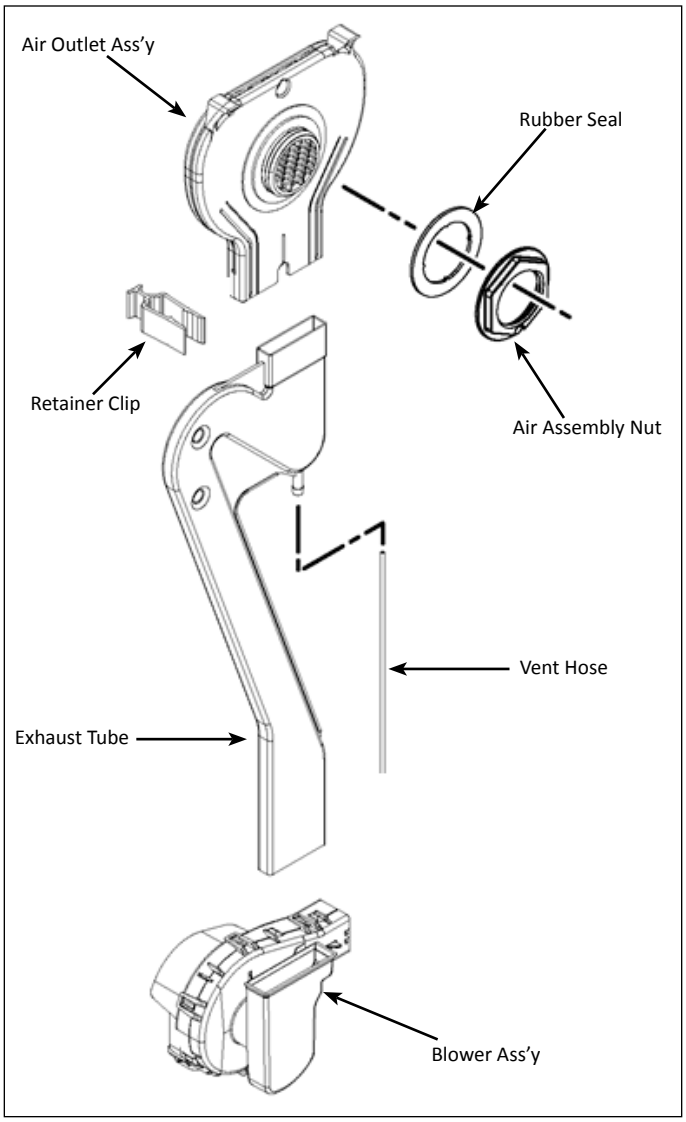

Figure 1

Advanced ProDry™ Components

1. Unplug dishwasher or disconnect power.
2. Access ProDry™ components on left side of tub (see Figure 2). To disassemble ProDry™ components; unscrew air assembly nut from inside tub, disconnect vent hose, then slide exhaust tube and air outlet assembly up and out of blower assembly to remove.

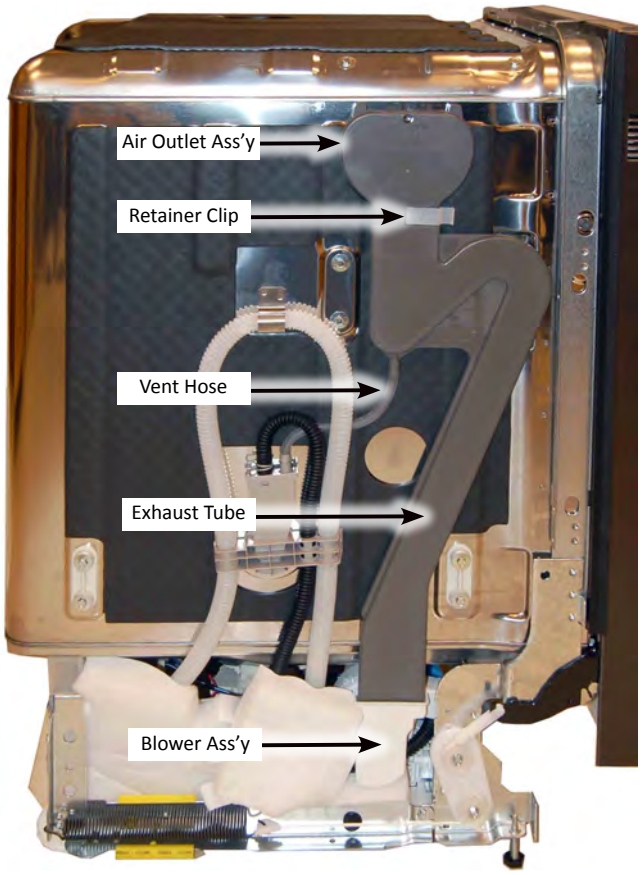

Figure 2

3. From underneath the tub, disconnect the harness and remove the blower vent from the Blower Assembly (see Figure 3).
4. Remove the two (2) 1/4" screws securing Blower Assembly to dishwasher and remove assembly (see Figure 3).

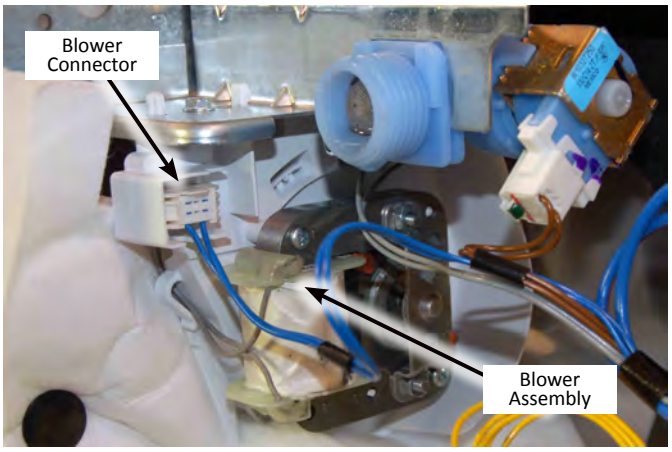

Figure 3

Overfill Assembly

⚠ WARNING

Electrical Shock Hazard

Disconnect power before servicing.

Replace all parts and panels before operating.

Failure to do so can result in death or electrical shock.

Overfill Assembly Components

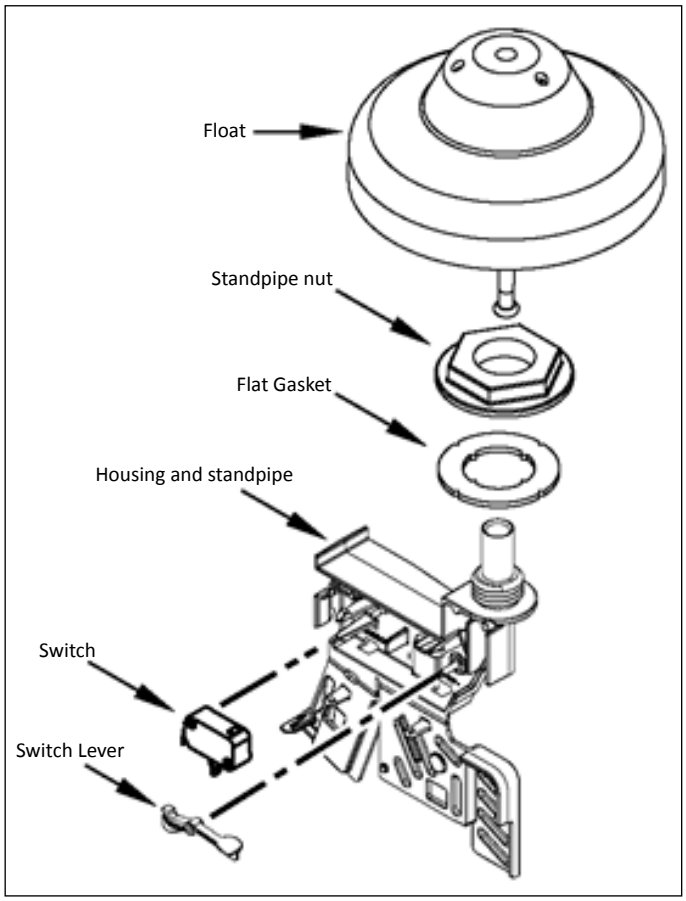

Figure 1

Accessing Overfill Assembly

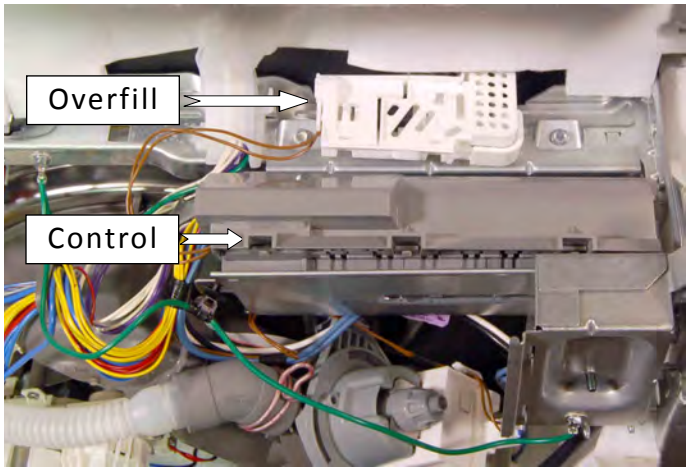

Figure 2 - Location of Overfill Assembly

1. Unplug or disconnect power.
2. Open right and left side covers, (see Figure 3).

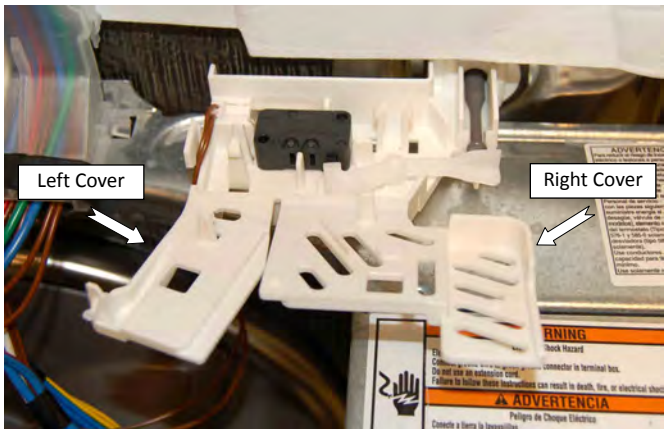

Figure 3

Location of float switch components. See Figure 4.

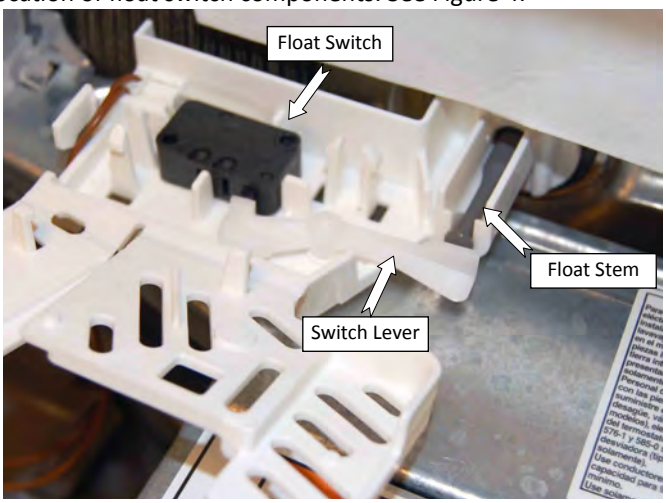

Figure 4

Interior LED Lighting

⚠ WARNING

Electrical Shock Hazard

Disconnect power before servicing.

Replace all parts and panels before operating.

Failure to do so can result in death or electrical shock.

Interior LED Lighting

(Available on some models)

1. Unplug dishwasher or disconnect power.
2. Access the LEDs on top of the tub (see Figure 1).

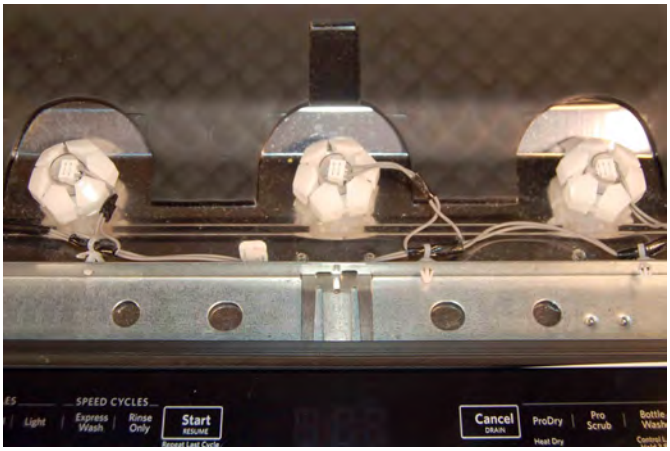

Figure 1

3. Remove harness from LED connector (see Figure 2).

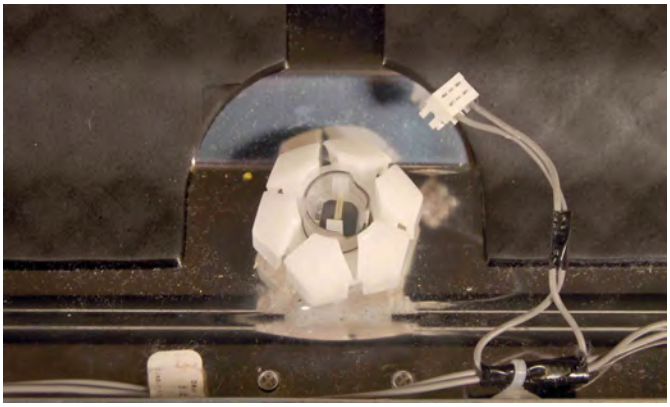

Figure 2

4. Unscrew large plastic nut securing the LED to top of tub (see Figure 3).

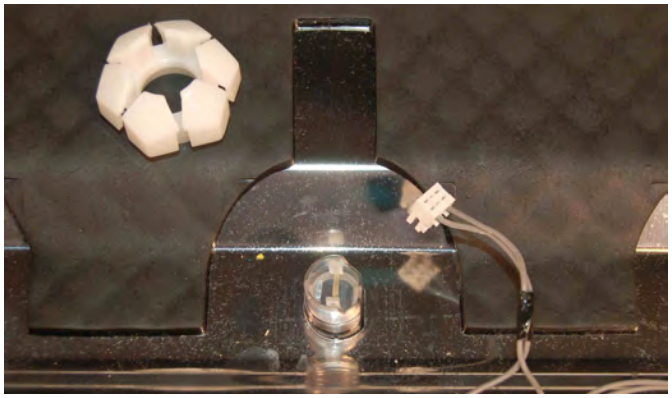

Figure 3

5. From the top, push the LED down into the tub. Reverse the procedure to reinstall new LED kit. See Figure 4.

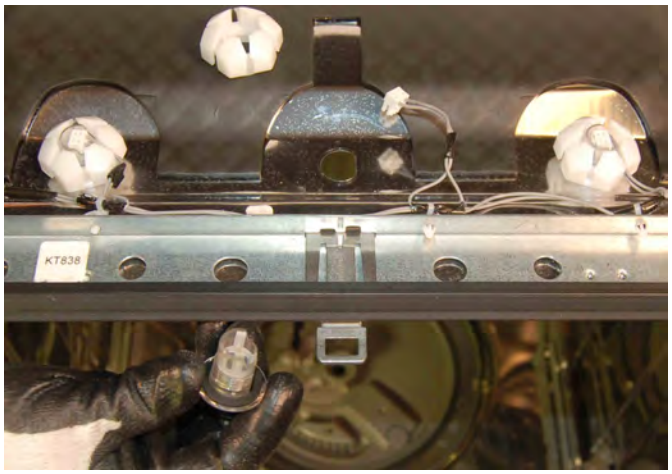

Figure 4

6. Order LED Kit when replacing defective LED. LED Kit Contents (see Figure 5).

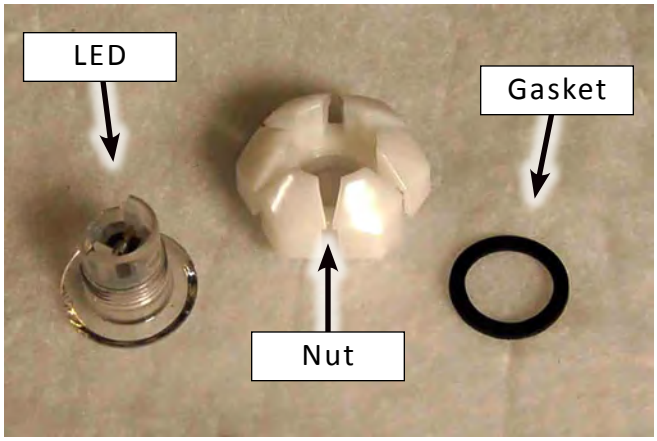

Figure 5

Accessing Door Components

⚠ WARNING

Electrical Shock Hazard

Disconnect power before servicing.

Replace all parts and panels before operating.

Failure to do so can result in death or electrical shock.

Remove Outer Door Panel & UI

1. Unplug dishwasher or disconnect power.
2. Remove 8 to 10 short screws on the sides and 2 long screws on each side of the latch assembly (see Figure 1).

Figure 1

3. Move the outer door panel away from door assembly with enough room to disconnect the User Interface harness and, if necessary, the harness clip (see Figure 2).

   NOTE: If the Electronic Control is mounted in the door assembly, the UI harness can be disconnected at the Control. If the Control is mounted under the tub, the UI harness and harness clip should be disconnected at the UI.

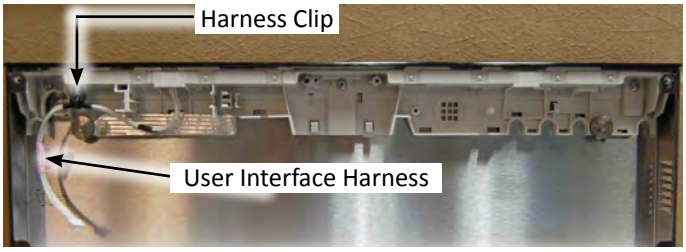

Figure 2

4. Remove the latch assembly from the outer door panel or disconnect the latch assembly harness.
5. Remove the outer door panel and UI assembly.

Removing User Interface

⚠ WARNING

Electrical Shock Hazard

Disconnect power before servicing.

Replace all parts and panels before operating.

Failure to do so can result in death or electrical shock.

Removing the User Interface

1. Unplug dishwasher or disconnect power.
2. Perform the procedure “Remove Outer Door Panel & UI” on page 4-7.
3. Use a 5/16” driver to remove the two (2) shoulder bolts shown below in Figure 1.
4. Use a T-15 TORX driver to remove the three (3) screws securing the UI to the outer door panel (see Figure 1).

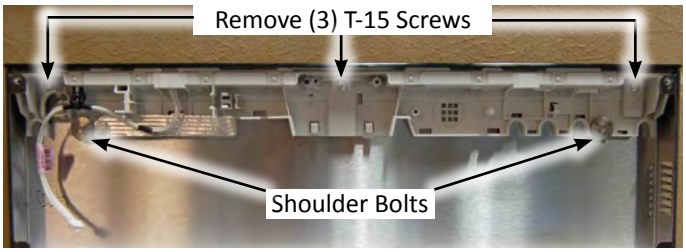

Figure 1

Figure 2

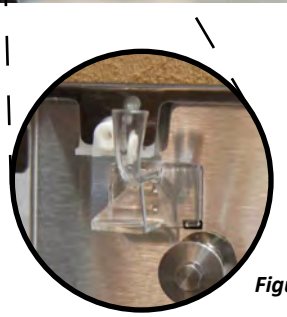

NOTE: The light pipe is not removed during UI replacement. It remains affixed to the outer door panel. (See Figure 3.)

Figure 3 - Light Pipe

Console Assembly (User Interface)

Figure 4

User Interface and Latch Parts

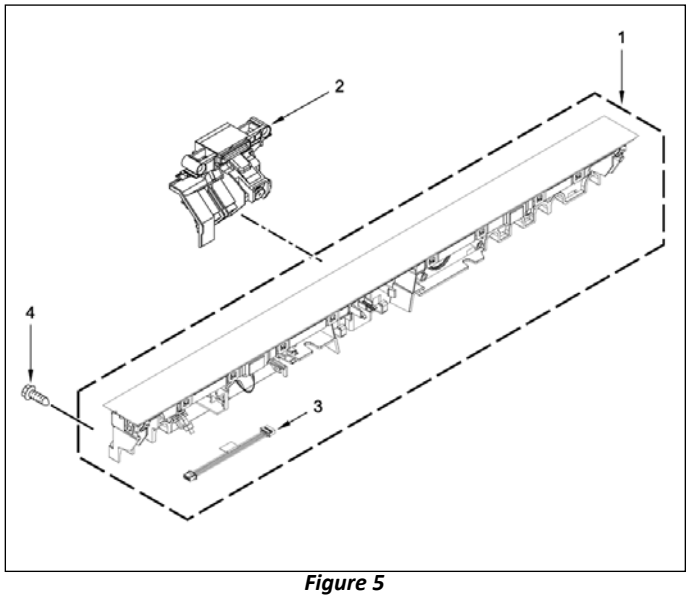

Figure 5

UI and Latch Components

1. Console Assembly (UI)
2. Latch Assembly
3. 4-Wire Jumper
4. Screw

Removing Latch Assembly

⚠ WARNING

Electrical Shock Hazard

Disconnect power before servicing.

Replace all parts and panels before operating.

Failure to do so can result in death or electrical shock.

Remove Latch Assembly

1. Unplug dishwasher or disconnect power.
2. Remove the outer panel from the door.
3. To remove latch assembly, insert a small flat-blade screwdriver into the clip slots on each side of the latch. Gently push in to release latch clips, (see Figures 1 and 2).

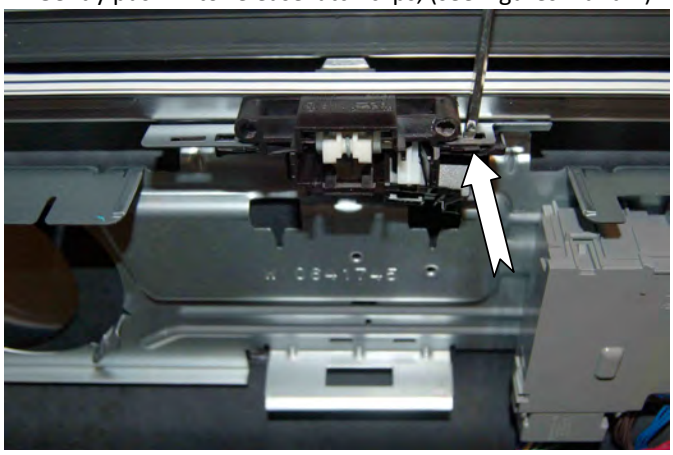

Figure 1

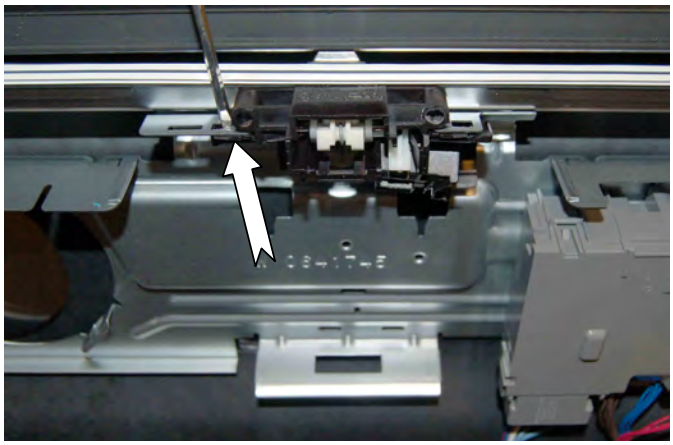

Figure 2

4. Remove latch assembly from door, (see Figure 3).
5. Disconnect harness assembly.

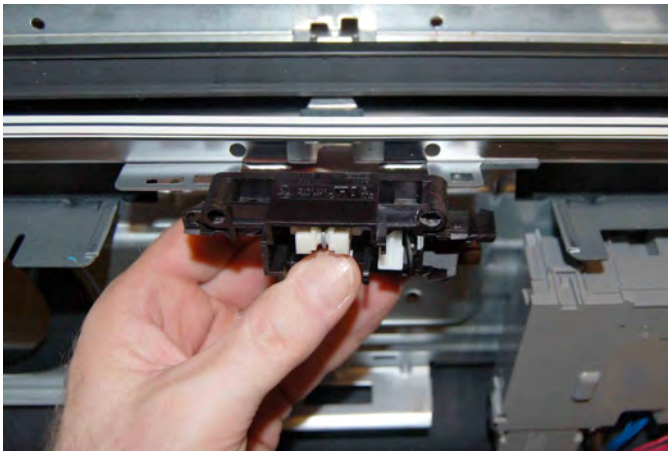

Figure 3

Door Latch

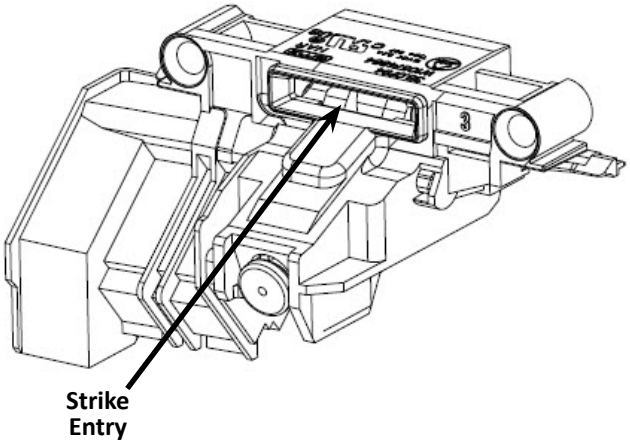

Figure 4

Removing Dispenser Assembly

⚠ WARNING

Electrical Shock Hazard

Disconnect power before servicing.

Replace all parts and panels before operating.

Failure to do so can result in death or electrical shock.

Removing the Dispenser

1. Unplug dishwasher or disconnect power.
2. Remove the outer panel from the door.
3. Disconnect dispenser harness.

4a. **LONG DISPENSER:** Remove - 6 - ¼" hex head screws securing the dispenser to the door. Remove dispenser assembly and bracket, (see Figures 1 & 3).

4b. **MINI DISPENSER:** Use a flat-blade screwdriver on locking clips to remove dispenser assembly (see Figures 2 & 4).

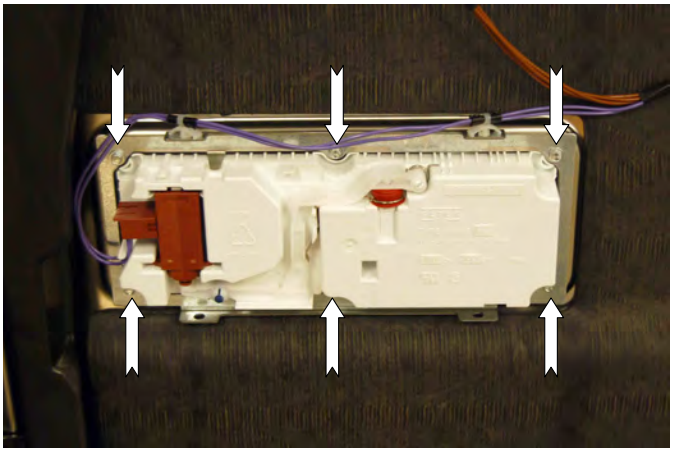

Figure 1 - Long Dispenser

Figure 2 - Mini Dispenser

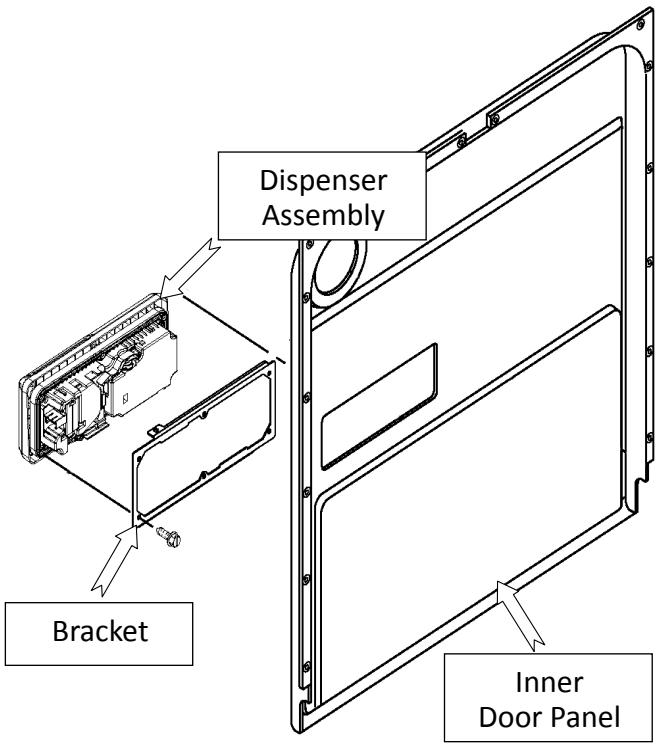

Figure 3 - Long Dispenser

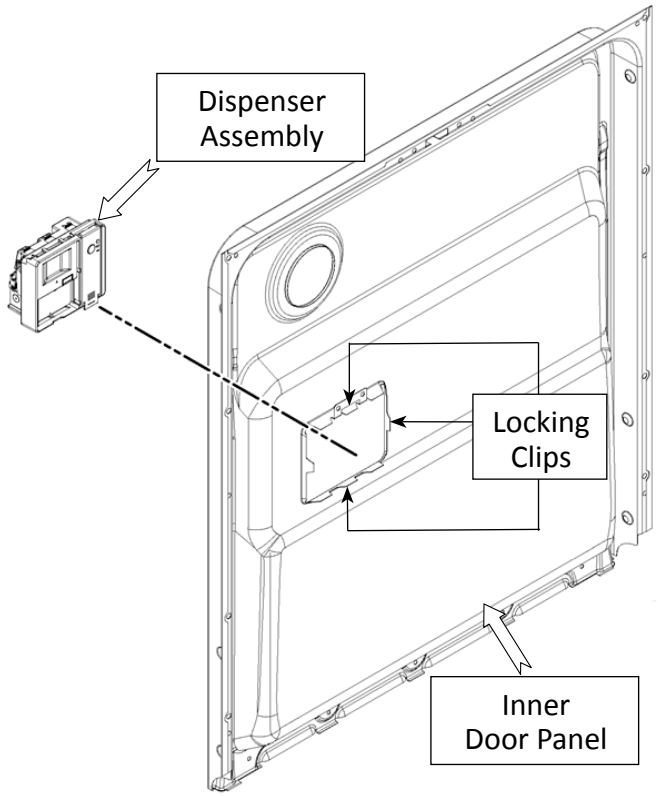

Figure 4 - Mini Dispenser

In Tub Components

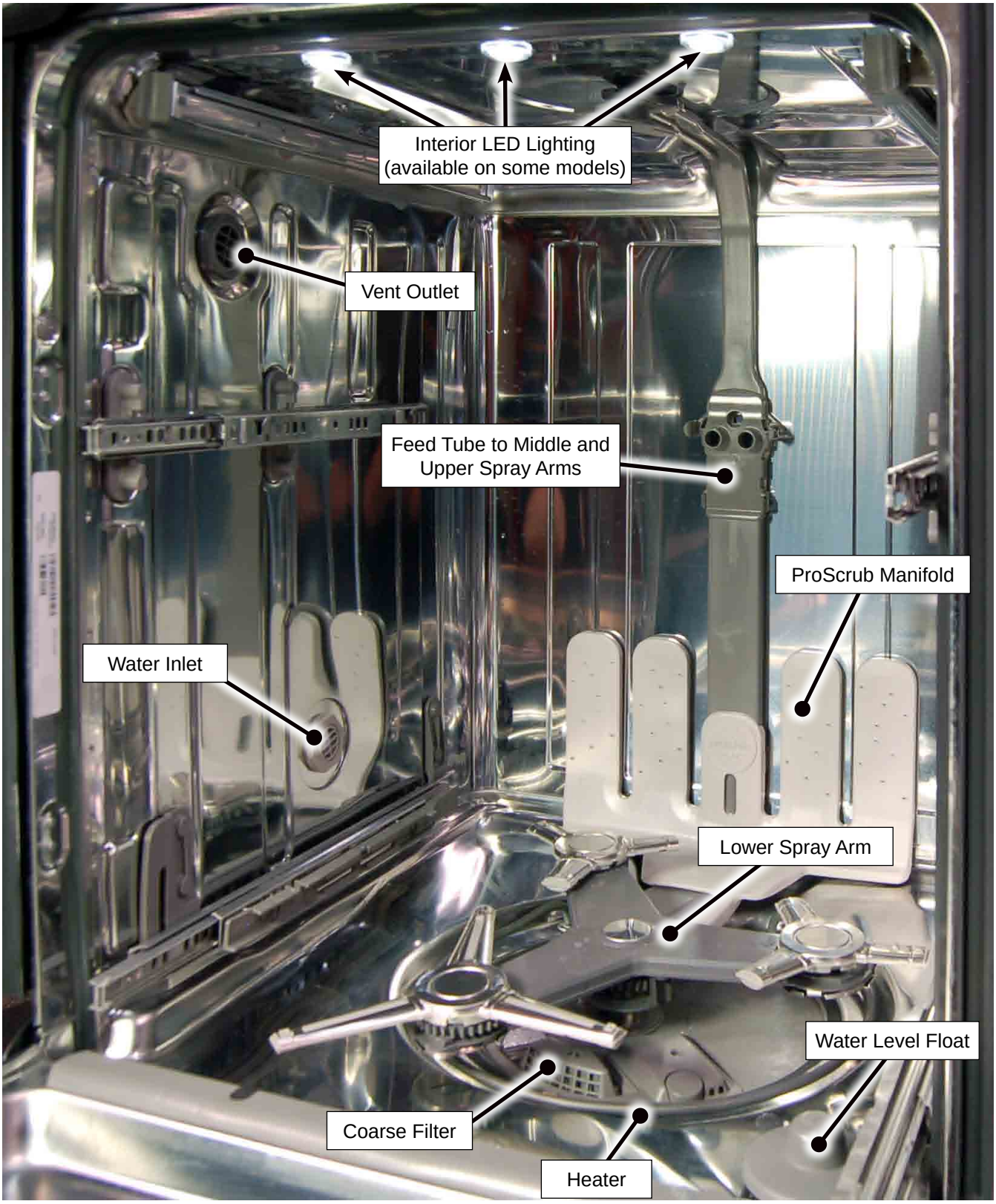

Tub Component Identification

Spray Arms, Feed Tube, and Manifold

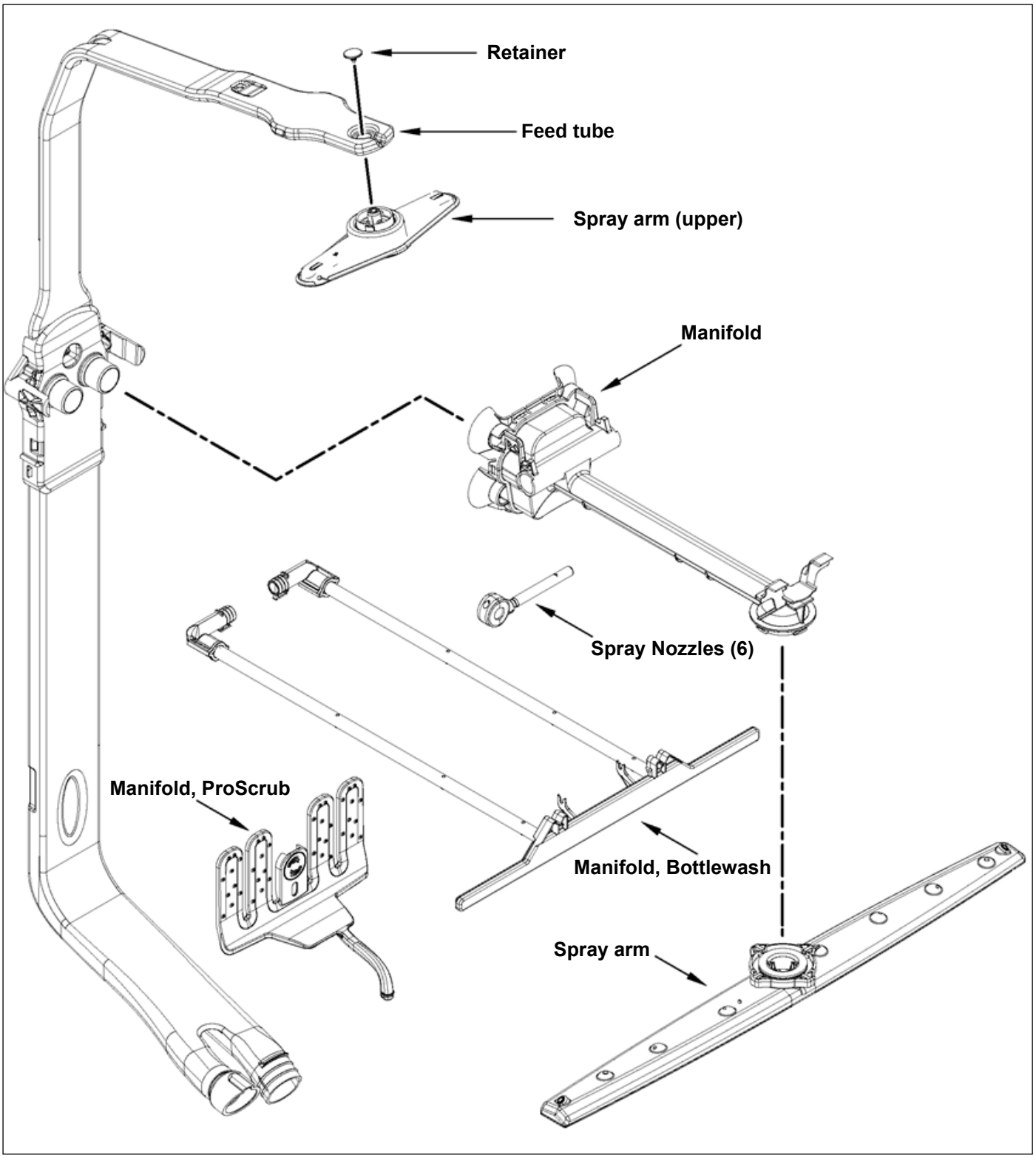

Component Identification

Removing the Racks

Removing The Upper Rack

(for SatinGlide rails)

1. To gain access to the removable tabs on the tracks/rails, pull the upper rack forward about halfway out of the tub.
2. On one side, press the tab on the track in and pull up the front end of the rack out of the track. See Figures 1 & 2.

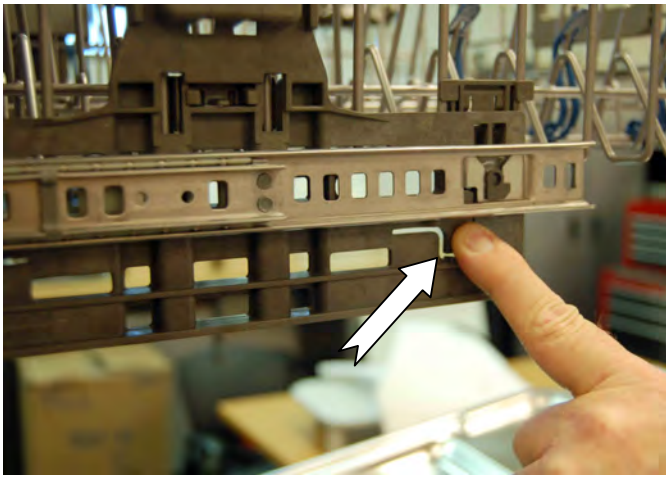

Figure 1

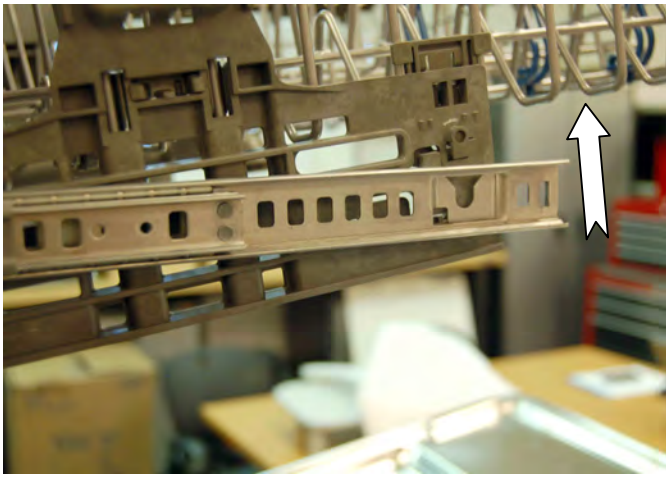

Figure 2

3. Then repeat this step on the other side to completely remove the front end of the rack.
4. Then remove the back end of the rack, by pulling the back end out with a slightly forward, and then upward motion.

Removing The Lower Rack

(for SatinGlide rails)

1. To gain access to the locking clips on the lower rack, pull the lower rack forward all the way out of the tub until rack stops and is resting on the door.
2. On one side, gently lift up on the Rear Carriage Support locking clip until it disengages the track assembly, (see Figure 3).

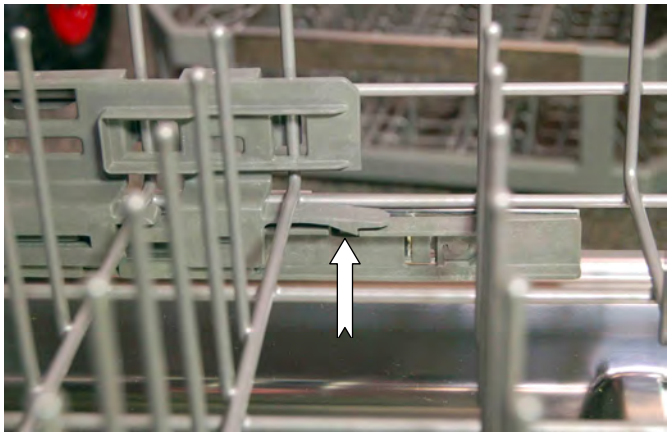

Figure 3

3. Then repeat this step on the other side to completely disengage lower rack. Pull rack forward to remove from track assembly.

Removing the Culinary Tool Rack

(3rd level rack - available on some models)

1. To access track stops, pull the rack forward until it stops and clicks into place.
2. To open track stops, flip the track stop to the outside of the track, (see Figure 4).
3. After opening both track stops, slide front wheels up and out of the slot in track. Continue to pull rack forward in track and slide the back wheels up and out of the track.
4. Close track stops.
5. Slide rack tracks back into dishwasher.

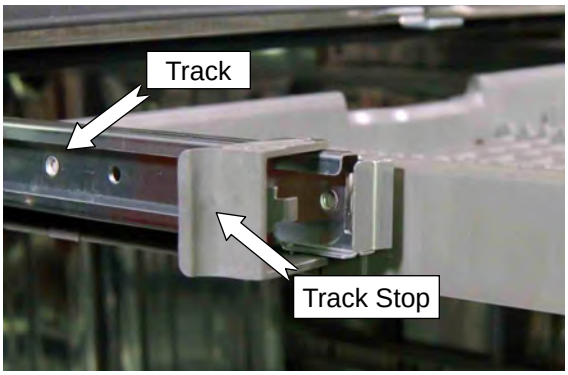

Figure 4

Removing Lower Spray Arm

To remove the lower spray arm:

1. Lower spray arm nut location, (see Figure 1).

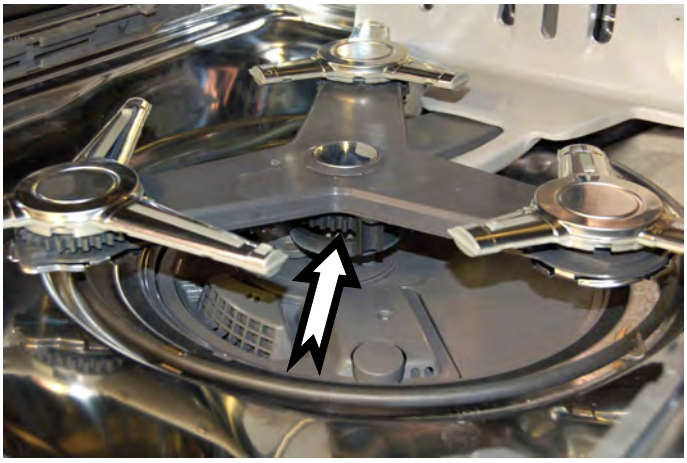

Figure 1

2. Rotate the lower spray arm nut ¼ turn counter clockwise to remove the spray arm, (see Figure 2).

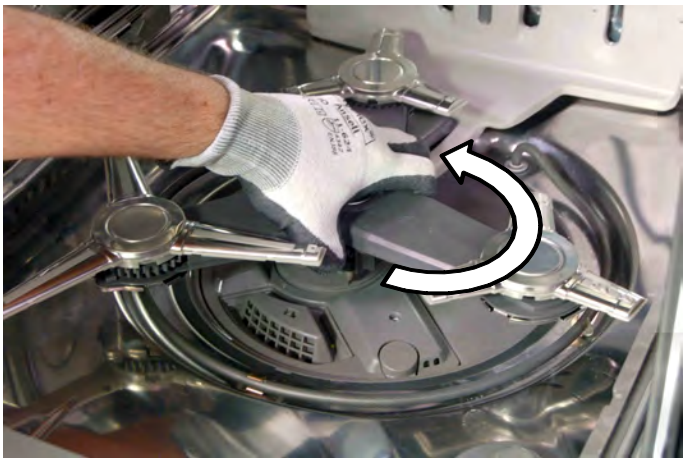

Figure 2

3. Lift off lower spray arm, (see Figure 3).

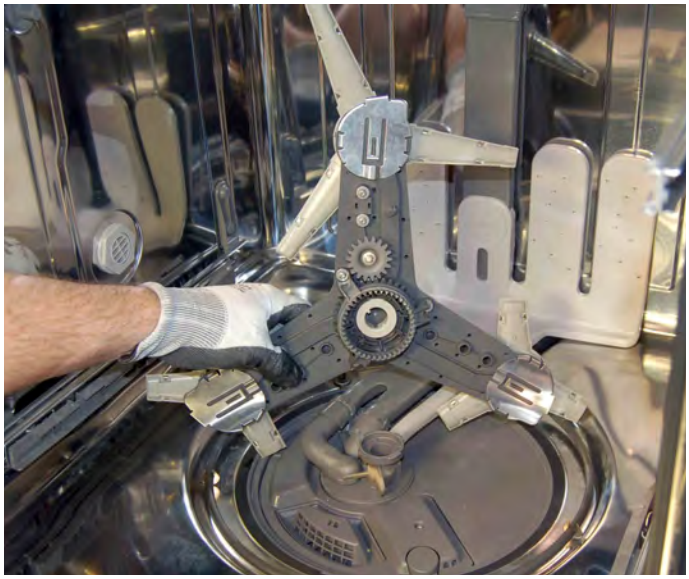

Figure 3

Lower Spray Arm Reinstallation

1. Place spray arm on the diverter housing and slowly turn spray arm until it seats on diverter—making sure the "corner arm" is pointed towards the front right corner of the tub (see Figure 4).
2. Grasp lower spray arm nut and turn 1/4" clockwise to secure in place on diverter housing.
3. Run the Diagnostic Cycle to verify spray arm operation.

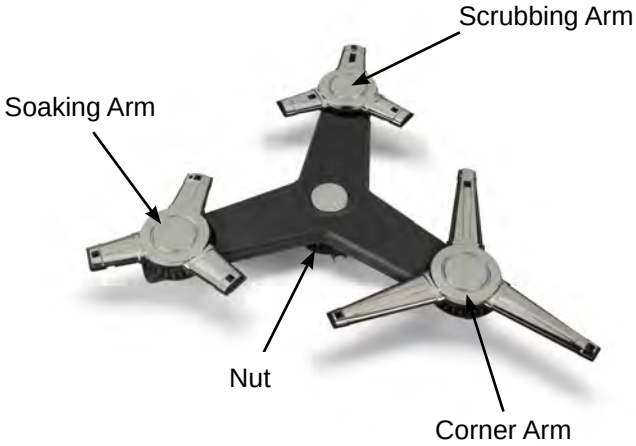

Figure 4

Removing ProScrub® Manifold and Feed Tube

Remove ProScrub® Manifold: (available on some models)

1. Unsnap manifold from distribution tube.
2. Disconnect the manifold tube from the sump by lifting up, (see Figure 1).

Figure 1

3. Gently pull back on locking lever and swing up feed tube assembly (see Figures 2 and 3).

Figure 2

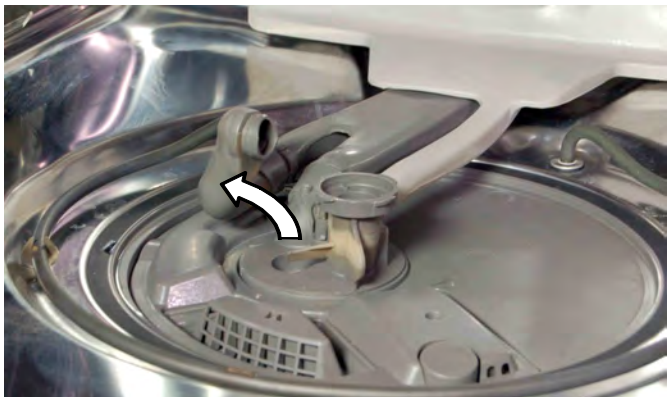

Figure 3

4. Unsnap feed tube from upper and lower clips (see figure 4).

Figure 4

5. Remove feed tubes from sump assembly, (see Figure 5).

Figure 5

Removing Diverter Disk

Remove Diverter Cover:

1. Release the lock on the diverter housing, (see Figure 1).

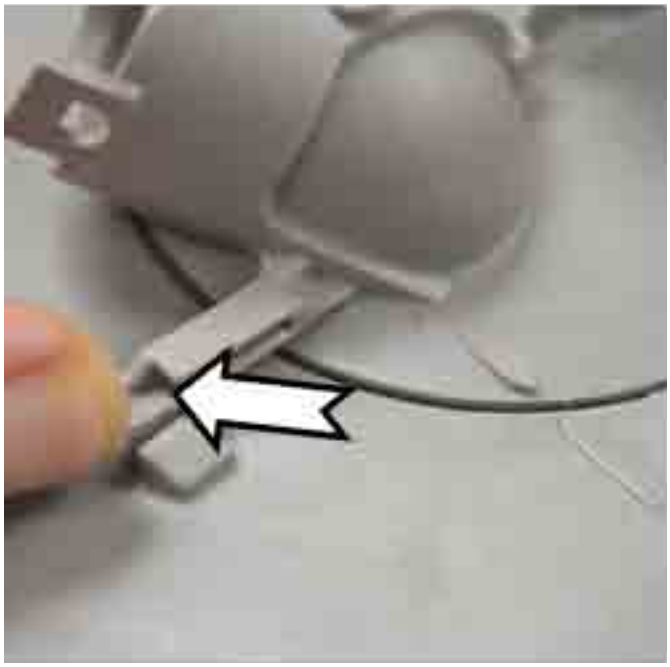

Figure 1

2. Rotate the housing counterclockwise, (see Figure 2).

Figure 2

3. Lift out the housing, (see Figure 3).

Figure 3

Diverter Disk:

4. The diverter disc attaches to a keyed shaft, (see Figure 4).

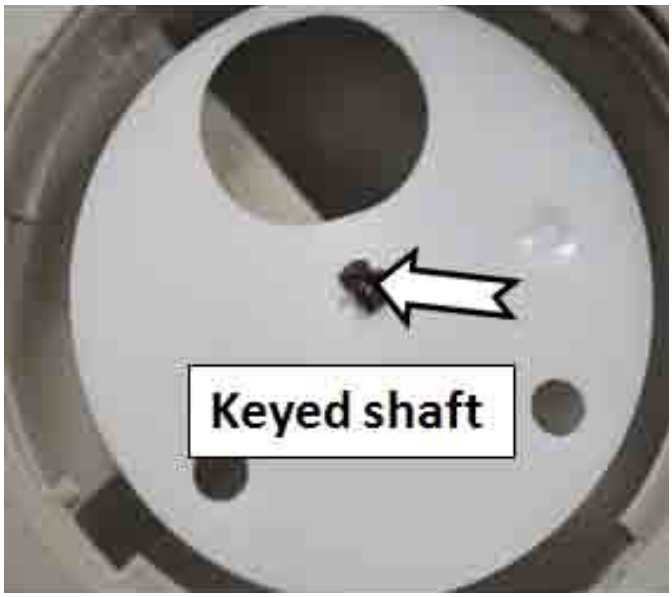

Figure 4

continued....

Removing Diverter Disk (continued)

5. Lift off the disc, (see Figures 5 and 6).

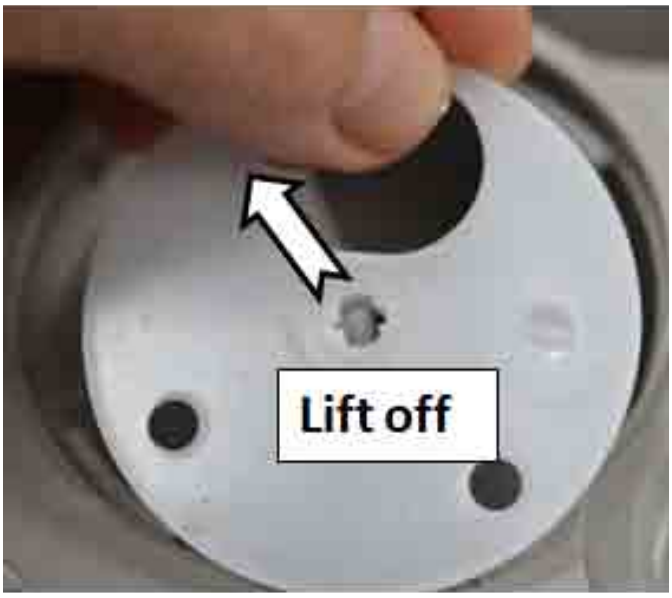

Figure 5

Figure 6

Install Diverter Cover

1. Align the arrow on the diverter housing to the lower arrow on the sump.
2. Rotate the housing clock wise until the diverter housing locks in place, (see Figure 7).

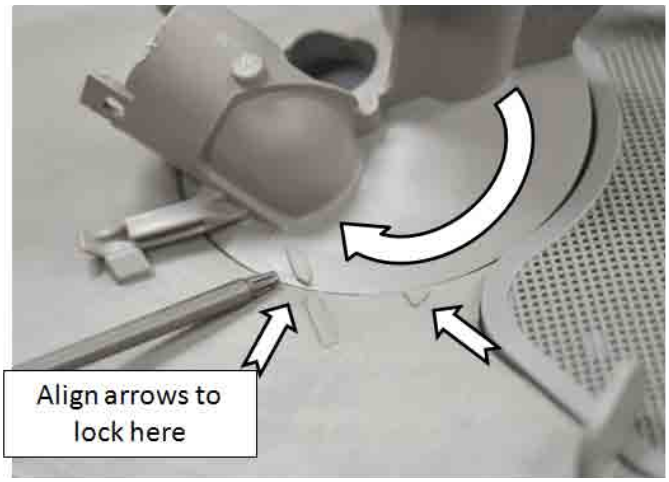

Figure 7

Under Tub Components

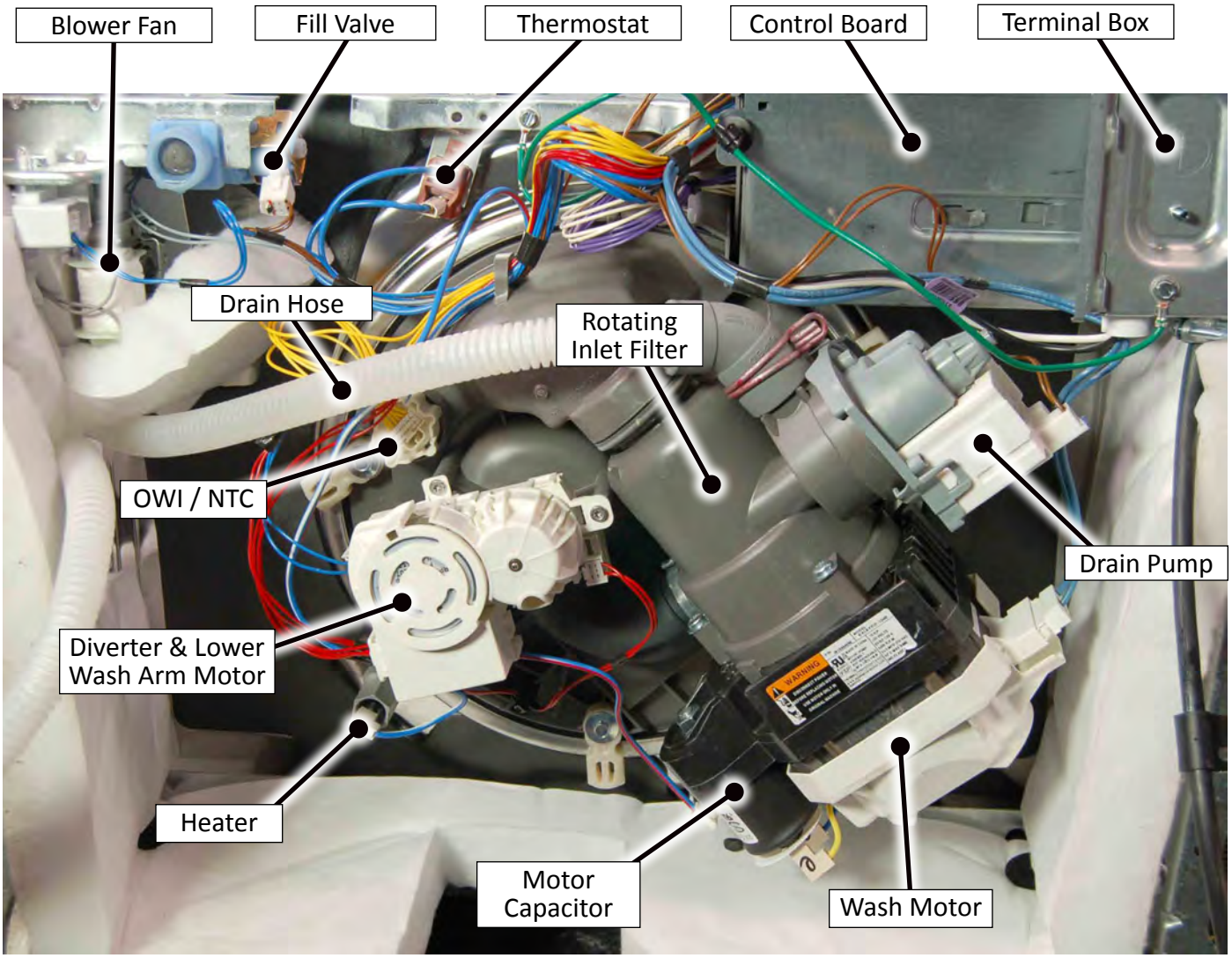

Figure 1

Removing Electronic Control

⚠ WARNING

Electrical Shock Hazard

Disconnect power before servicing.

Replace all parts and panels before operating.

Failure to do so can result in death or electrical shock.

Removing the Electronic Control

The electronic control is located under the tub between the float switch and terminal box (see Figure 1).

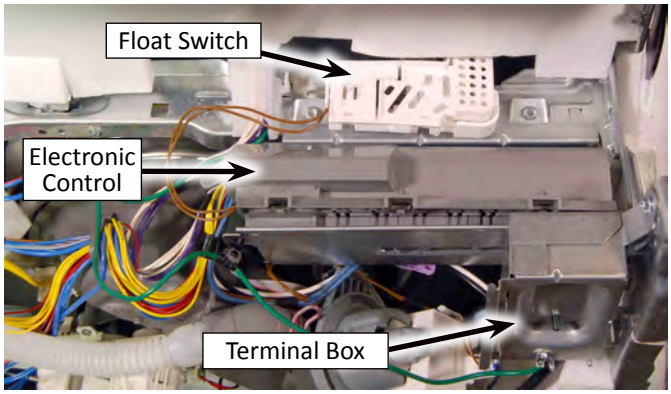

Figure 1

1. Unplug dishwasher or disconnect power.
2. Remove the ground wire clip from control mount bracket, (see Figure 2).

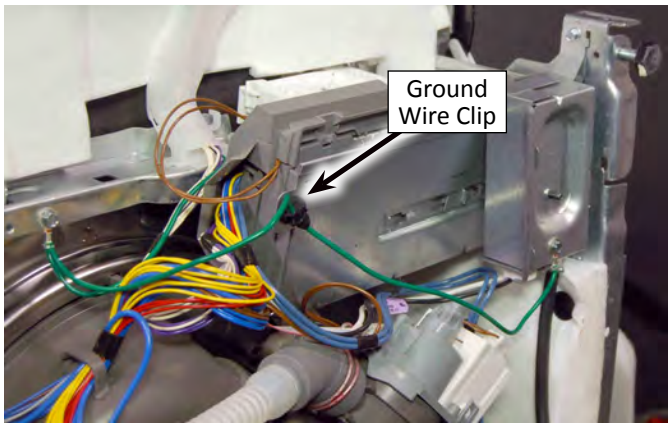

Figure 2

3. Slide electronic control to the left to disengage tabs from control bracket, (see Figure 3). Remove control assembly. **NOTE:** Terminal box removed to show control tab locations.

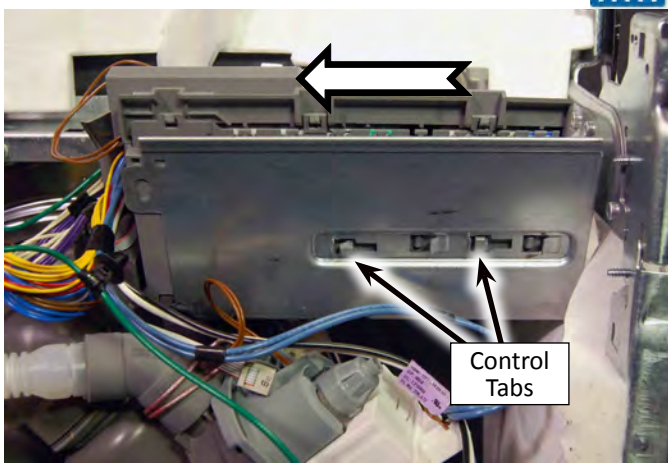

Figure 3

4. Remove covers to access electronic control assembly, (see Figures 4 & 5).

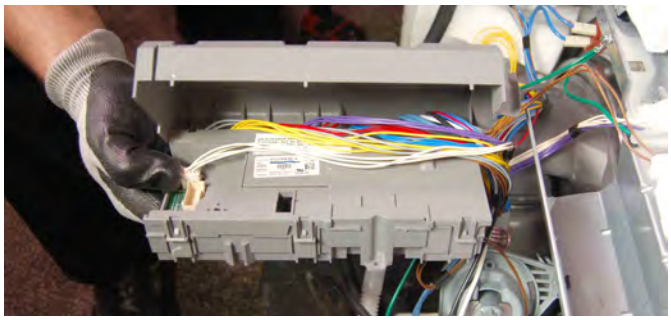

Figure 4

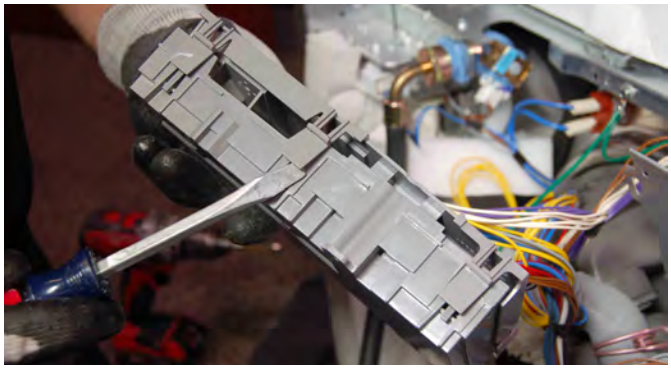

Figure 5

NOTE: The wiring harness provides enough length to access and test the control from the front of the dishwasher. See Figure 6.

Figure 6

Removing Heater Assembly

⚠ WARNING

Electrical Shock Hazard

Disconnect power before servicing.

Replace all parts and panels before operating.

Failure to do so can result in death or electrical shock.

Removing the Heater Assembly

1. Unplug dishwasher or disconnect power.
2. Disconnect wires from both heater terminals (see Figure 1).
3. Remove both heater element nuts (see Figure 2).
4. Remove heater element assembly from tub.

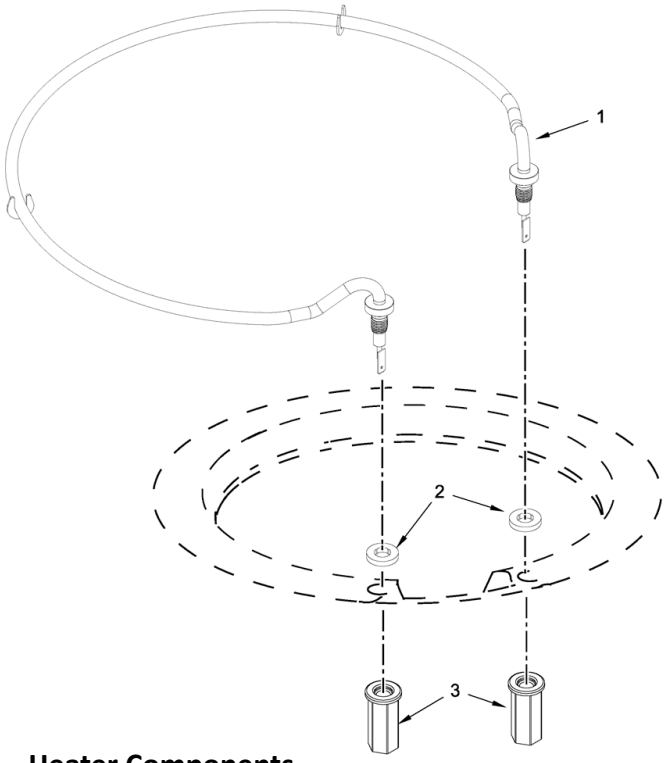

Heater Components

1. Heater Element Assembly
2. Heater Washer
3. Heater Element Nut

Figure 2

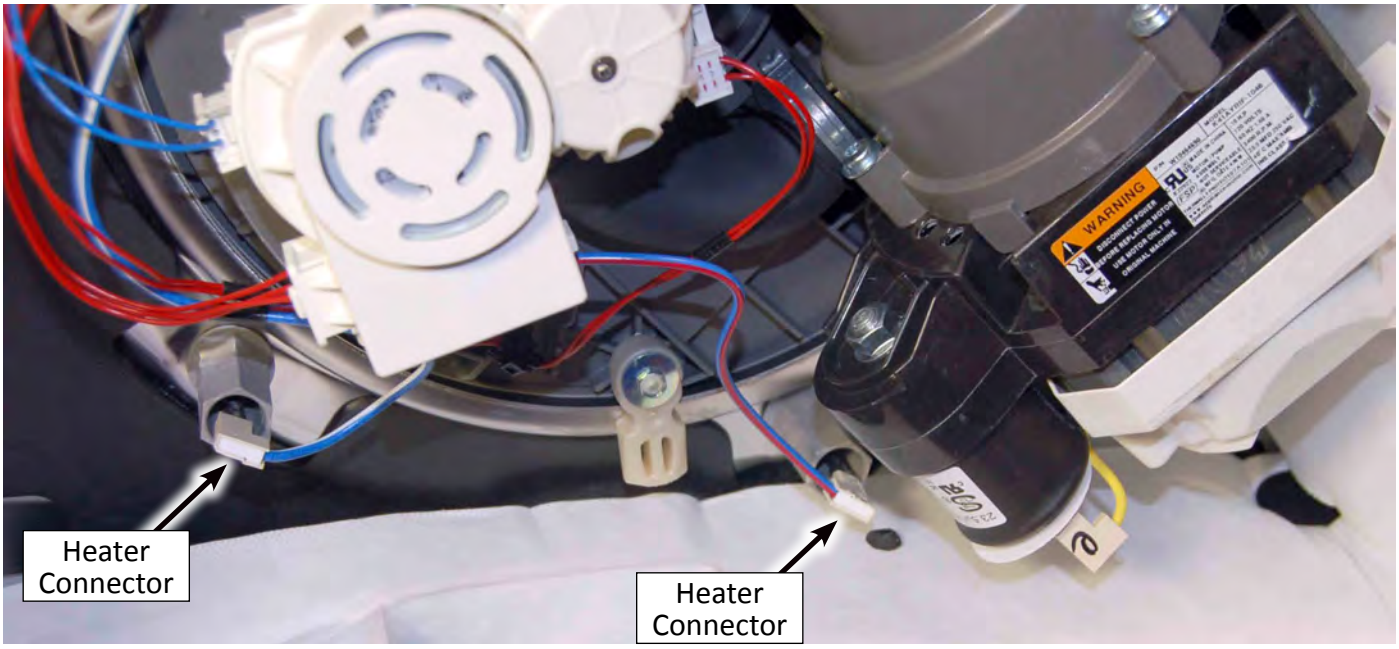

Figure 1

Removing Drain Pump & Sump Assembly

⚠ WARNING

Electrical Shock Hazard

Disconnect power before servicing.

Replace all parts and panels before operating.

Failure to do so can result in death or electrical shock.

Remove Drain Pump

1. Unplug dishwasher or disconnect power.
2. Unplug the wire harness connected to the drain pump, (see Figure 1).

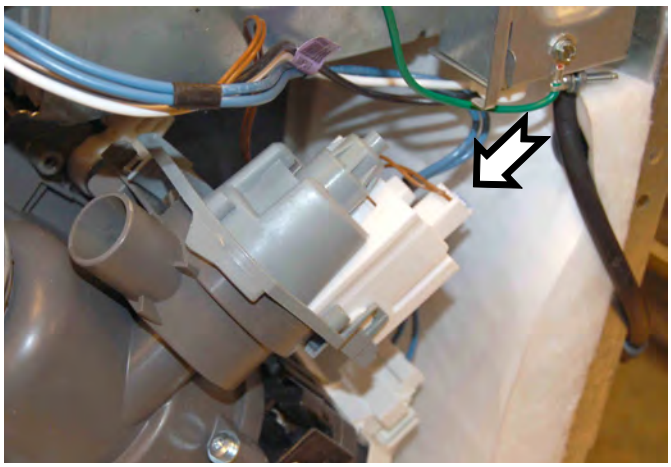

Figure 1

3. Rotate the drain pump 1/4 turn counterclockwise, (see Figure 2).

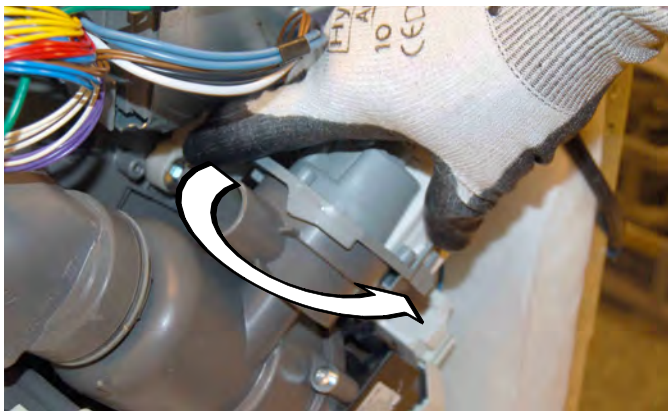

Figure 2

4. Remove the drain pump, (see Figure 3).

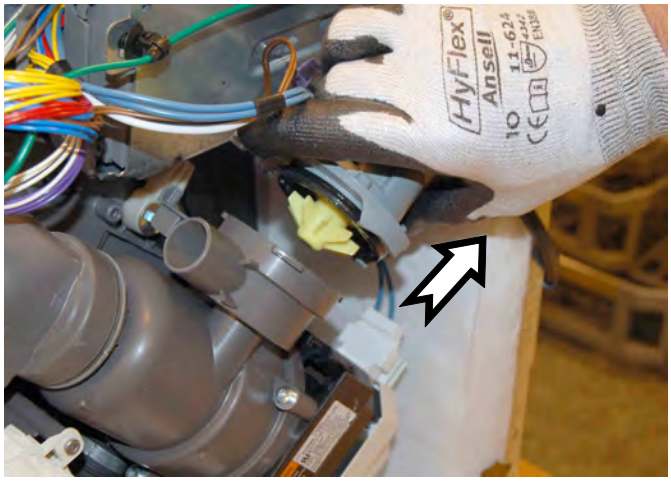

Figure 3

Remove Sump Assembly

1. First perform “Remove Drain Pump” procedure.
2. Release hose clamp and pull off the hose, (see Figures 1 and 2).

NOTE: Be prepared to catch the water from the sump area.

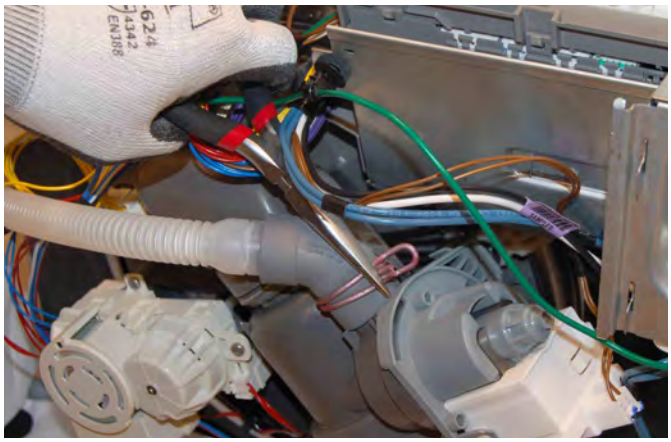

Figure 1

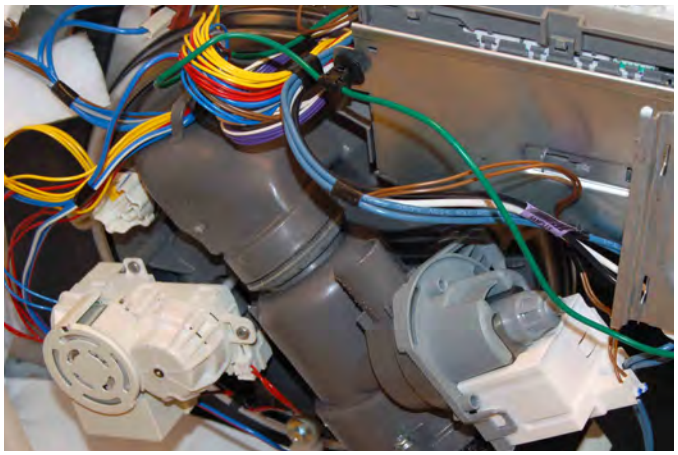

Figure 2

Removing Drain Pump & Sump Assembly (continued)

3. Remove the wire harness from the bracket on the side of the sump and move off to the side, (see Figures 3 and 4).

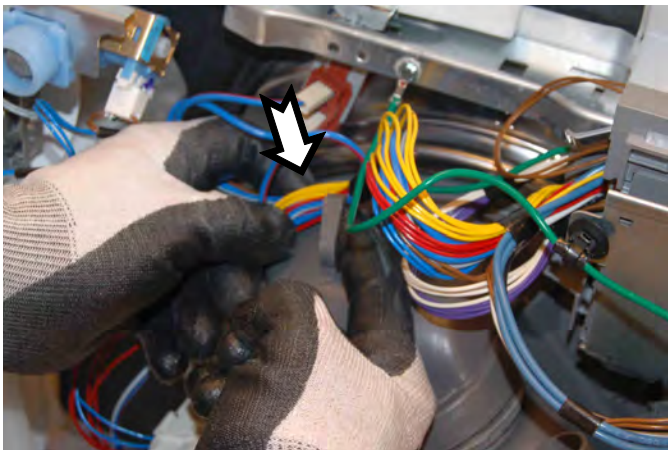

Figure 3

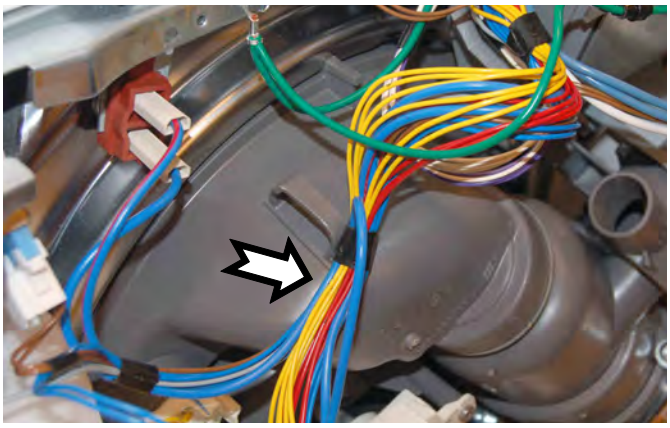

Figure 4

4. Unlock the three tabs securing the motor and sump assembly to the tub, (see Figures 5, 6 and 7).

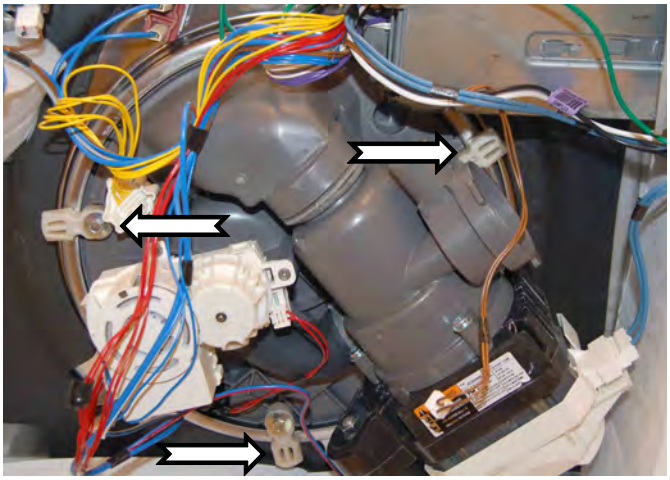

Figure 5

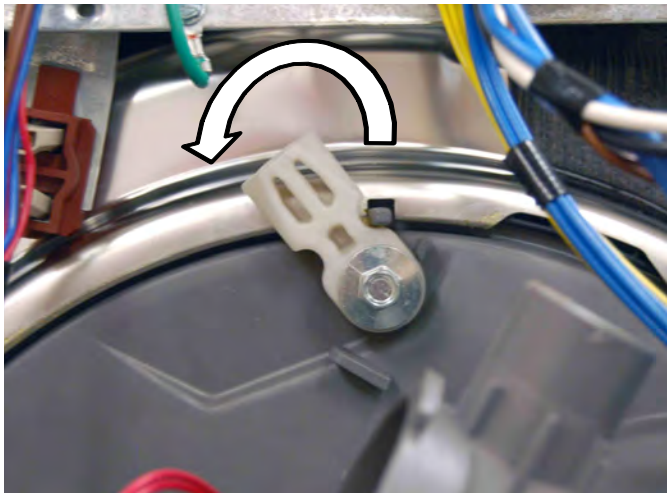

Figure 6 - Locked

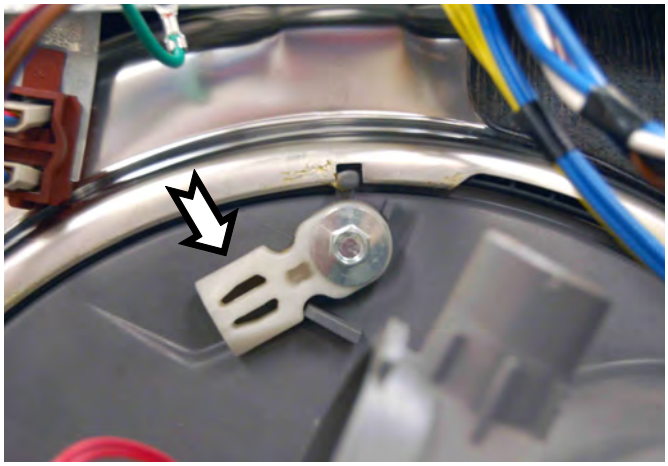

Figure 7 - Unlocked

5. Push upward on sump, from the bottom, to detach from tub.
6. From inside the tub, tilt the sump assembly and lift out far enough to flip sump over. See Figures 8 and 9.

Figure 8

Removing Sump Assembly (continued)

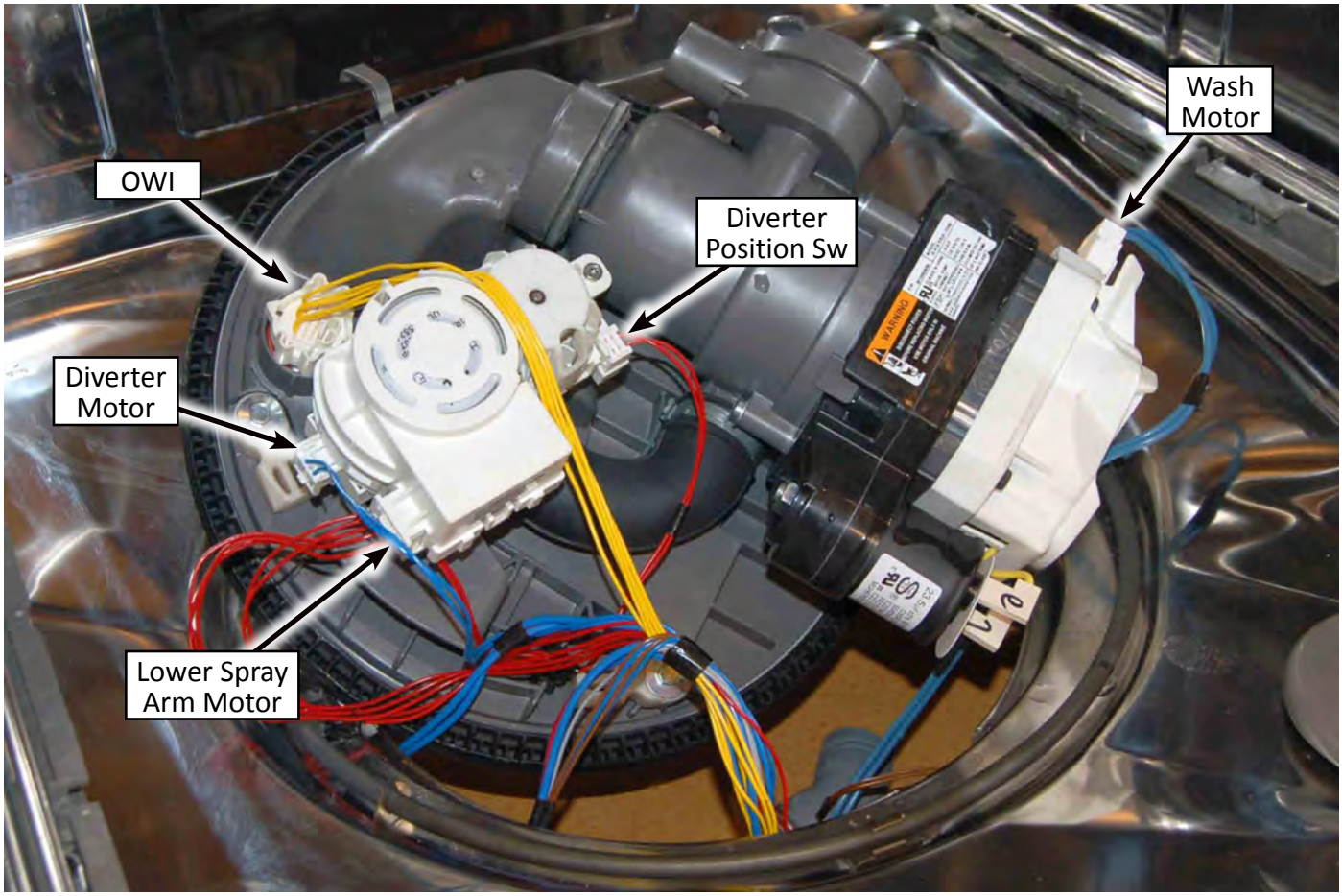

Figure 9

7. With the sump assembly flipped over inside the tub, disconnect the following harness:

   Refer to Figure 9 for harness locations:
   - diverter position switch harness
   - diverter motor harness
   - lower spray arm motor harness
   - wash motor harness
   - OWI harness (or remove OWI from sump)
8. Pry off harness clip from sump (see Figure 10). Remove sump assembly from dishwasher.

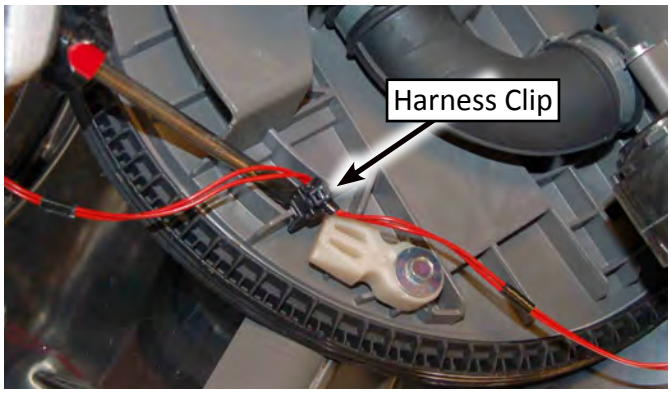

Figure 10

NOTE: When reinstalling the sump assembly, align the tab on the assembly with the slot in the tub. See Figures 11 and 12.

Figure 11

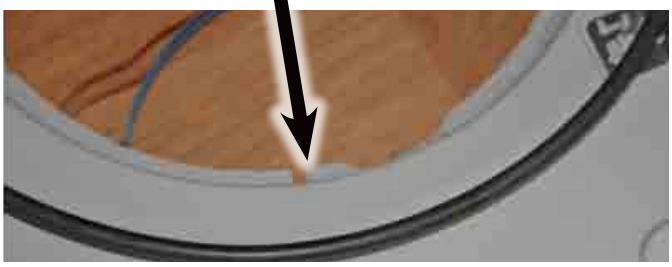

Figure 12

Removing Optical Water Indicator

⚠ WARNING

Electrical Shock Hazard

Disconnect power before servicing.

Replace all parts and panels before operating.

Failure to do so can result in death or electrical shock.

Removing Optical Water Indicator

1. Unplug dishwasher or disconnect power.
2. Locate Optical Water Indicator on bottom of sump assembly (see Figure 1).

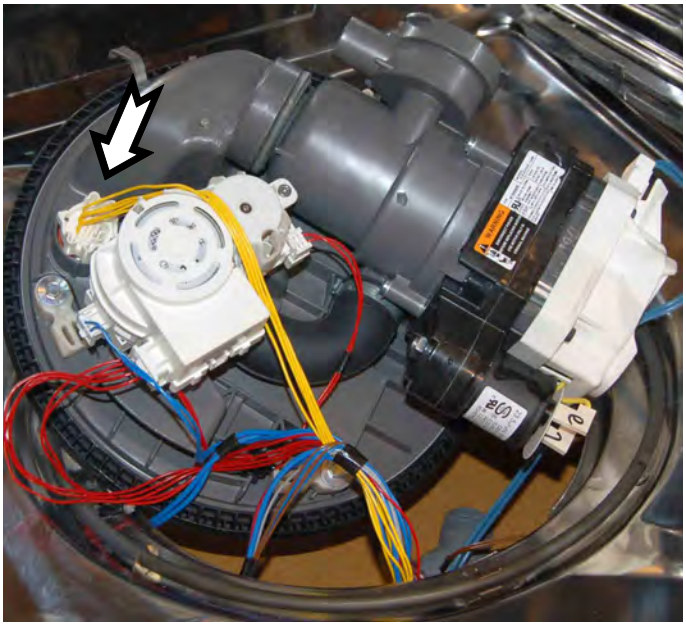

Figure 1

3. Rotate optical water indicator counter-clockwise 1/4 turn, see figure 2.

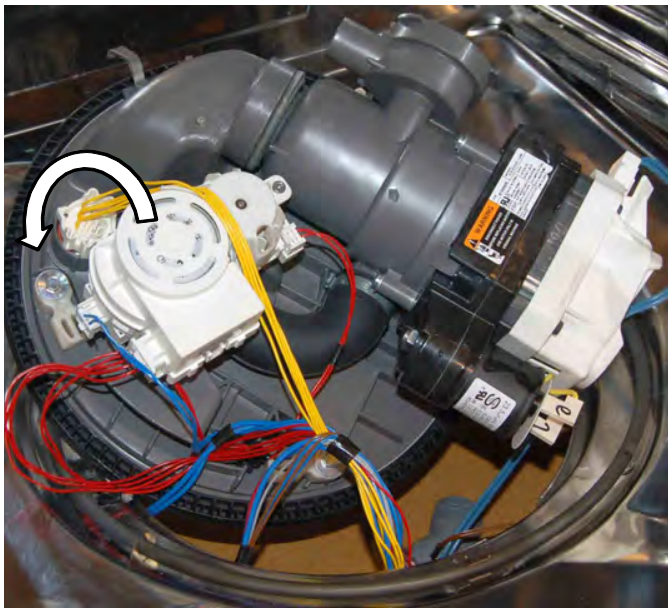

Figure 2

4. Pull out to remove, see figure 3.

Figure 3

5. Disconnect harness from Optical Water Indicator.

Removing Diverter Assembly

⚠ WARNING

Electrical Shock Hazard

Disconnect power before servicing.

Replace all parts and panels before operating.

Failure to do so can result in death or electrical shock.

Remove the Diverter Assembly

1. Unplug dishwasher or disconnect power.
2. If not done already, disconnect the diverter motor and sensor harnesses; and if available, the lower wash arm motor harness*. (See figure 1.)

   ***Note:** The lower spray arm motor, which is incorporated into the diverter assembly (see figure 1), is available on models that have the controlled lower spray arm.

Figure 1 - Diverter assembly w/spray arm motor

3. Remove 2 (two) T-15 Torx screws, (see Figure 2).

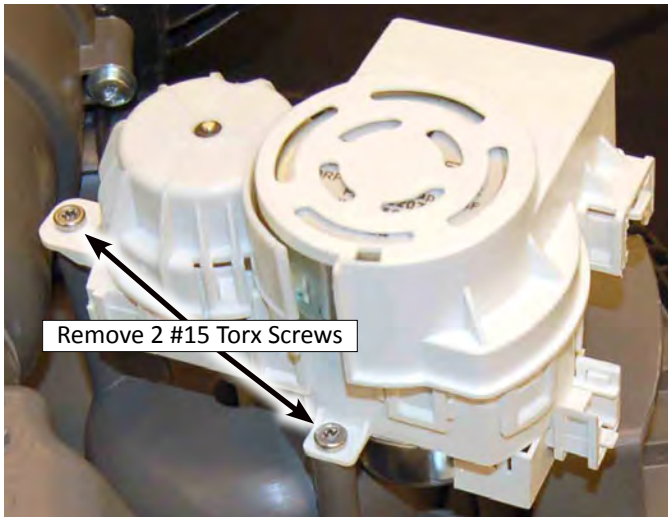

Figure 2

4. Lift up and remove diverter assembly from sump, (see Figure 3).

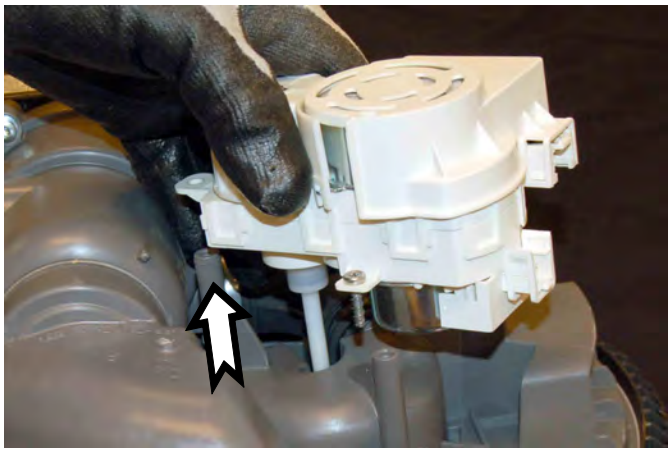

Figure 3

NOTE: The diverter disc is keyed to the motor shaft. The diverter motor can be removed without removing the diverter disc, but to install the diverter motor, the diverter housing must be removed to align the diverter disc to the motor shaft.

Microfiltration Wash System Parts

Wash Motor Exploded View

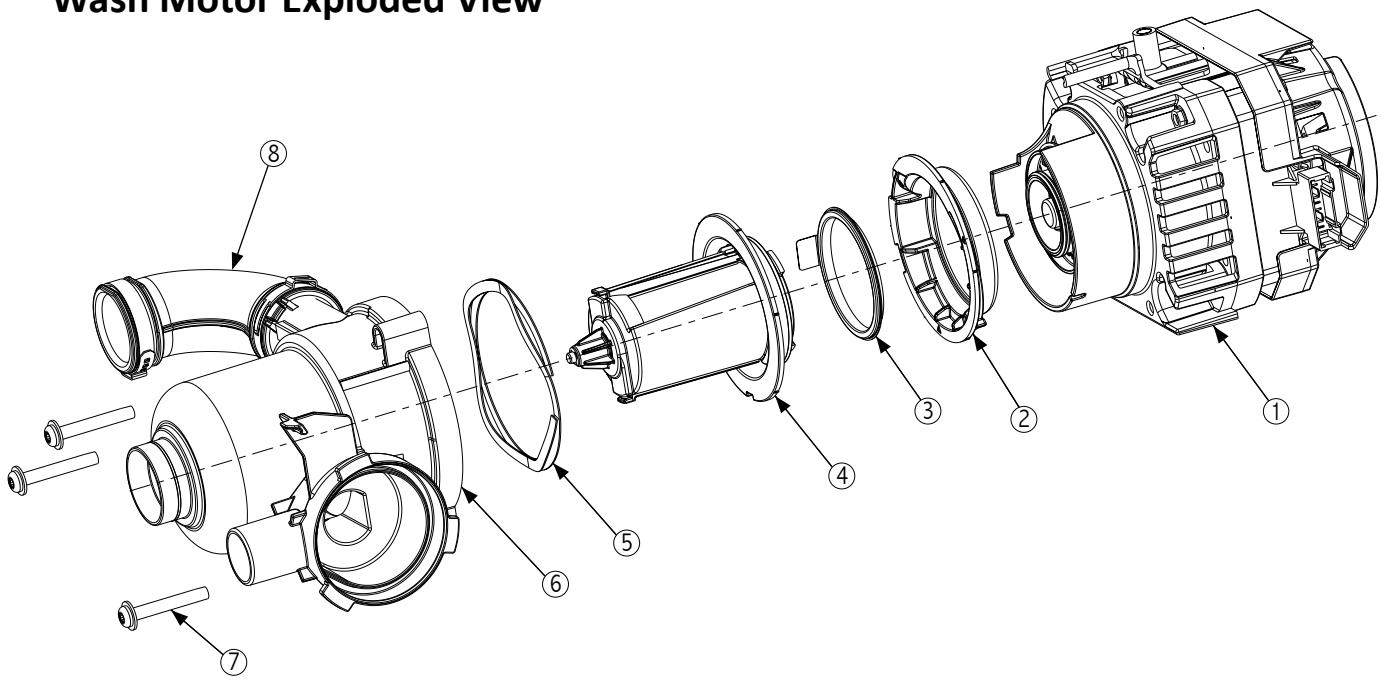

Figure 1 - Exploded View

Wash Motor Parts

Number	Description	Qty
1	Motor	1
2	Volute	1
3	Ring, Volute	1
4	Filter Ass'y, Pump (RIF)	1
5	Spring, Compression	1
6	Housing, Pump	1
7	Screw	3
8	Hose Ass'y (includes 2 clamps)	1
9	Capacitor (shown at right)	1

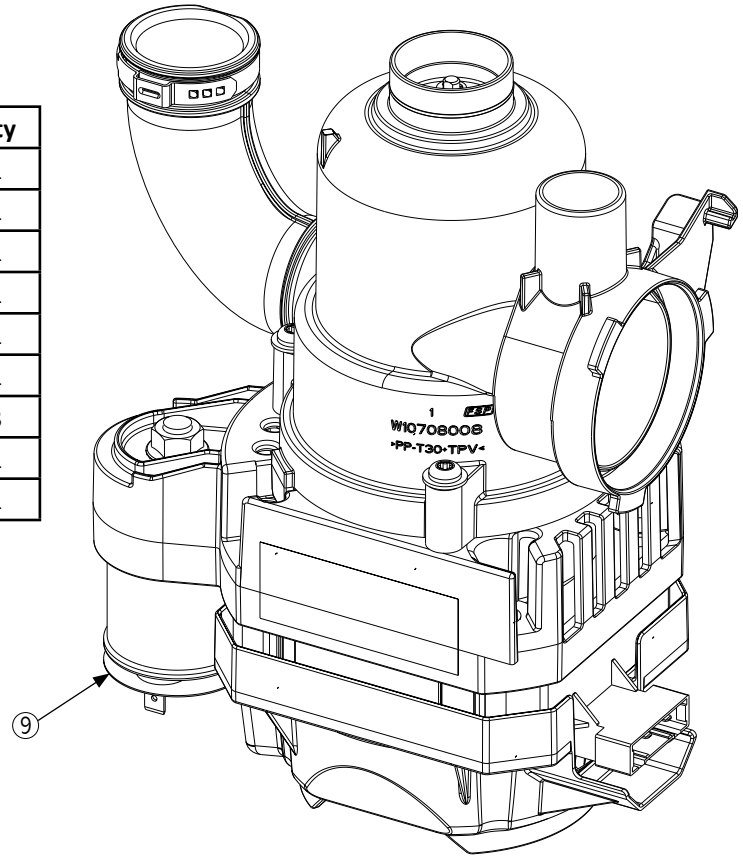

Figure 2 - Wash Motor Assembly

Removing Wash Motor & Rotating Inlet Filter

⚠ WARNING

Electrical Shock Hazard

Disconnect power before servicing.

Replace all parts and panels before operating.

Failure to do so can result in death or electrical shock.

Removing the Wash Motor

1. Unplug dishwasher or disconnect power.
2. If not done already, disconnect the wash motor harness. (See figure 1.)

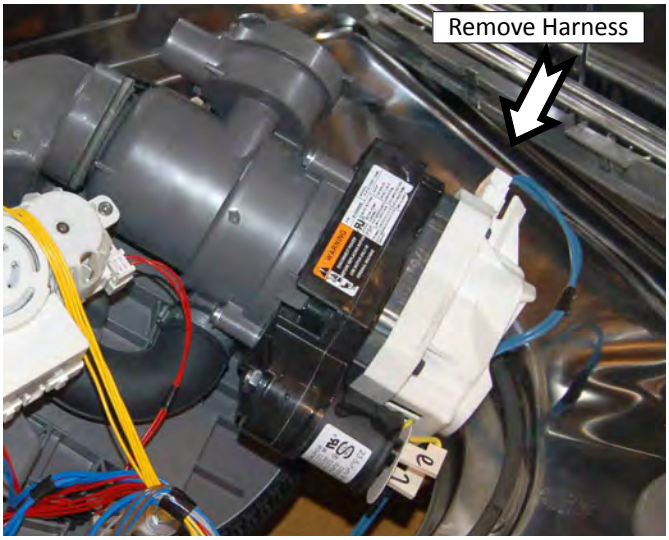

Figure 1

3. Remove clamp from sump side of hose (see Figure 2).

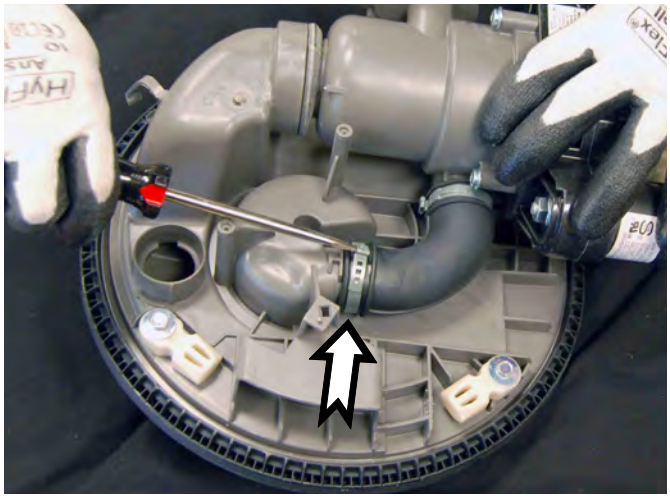

Figure 2

4. Use a screwdriver to gently loosen the seal between the grommet and the sump assembly (see Figure 3).

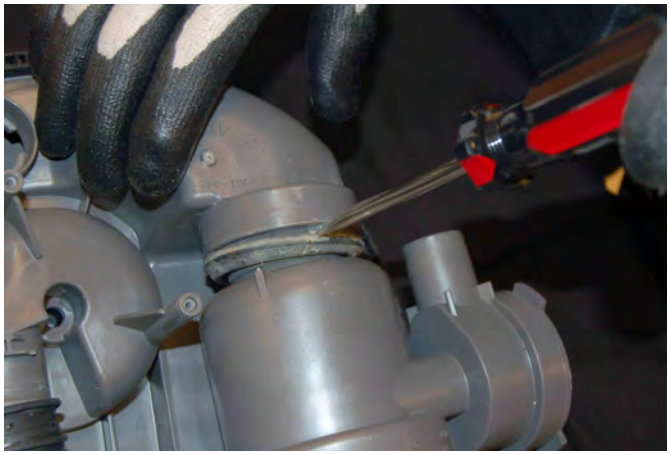

Figure 3

5. Pull down slightly on wash motor so that the isolator tube (see Figure 4) clears the sump edge gasket.

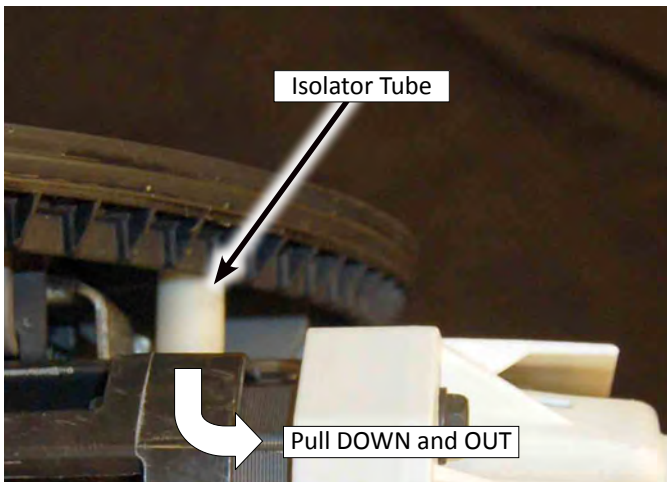

Figure 4

Removing Wash Motor & Rotating Inlet Filter

6. Remove wash motor and filter assembly from sump (see Figure 5).

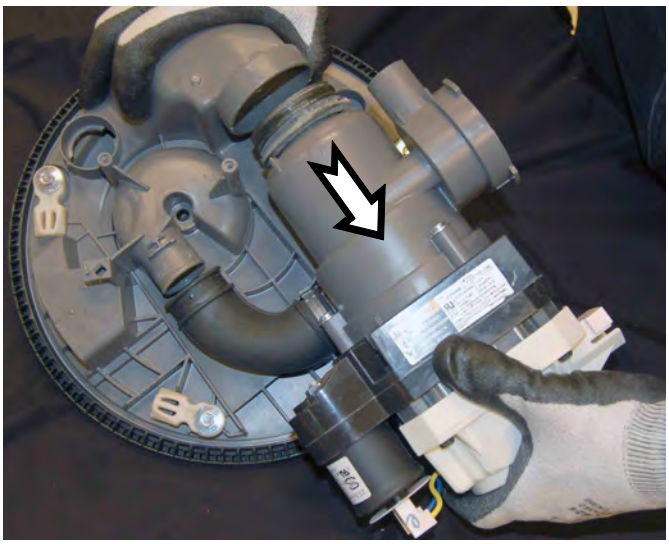

Figure 5

7. Remove Pump Housing - Remove the three (3) screws securing the pump housing to the motor assembly. See Figure 6 (only 2 of 3 screws are shown).

Figure 6

8. Use a screwdriver to separate the pump housing from the motor assembly (see Figure 7).

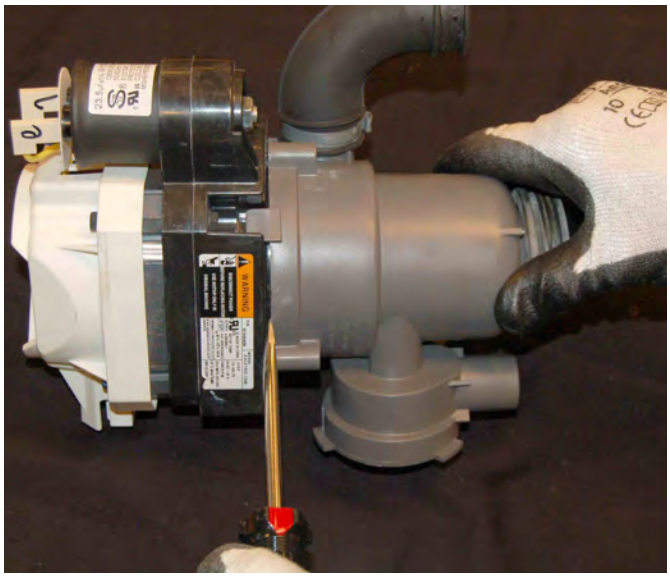

Figure 7

9. Remove pump housing from motor assembly (see Figure 8).

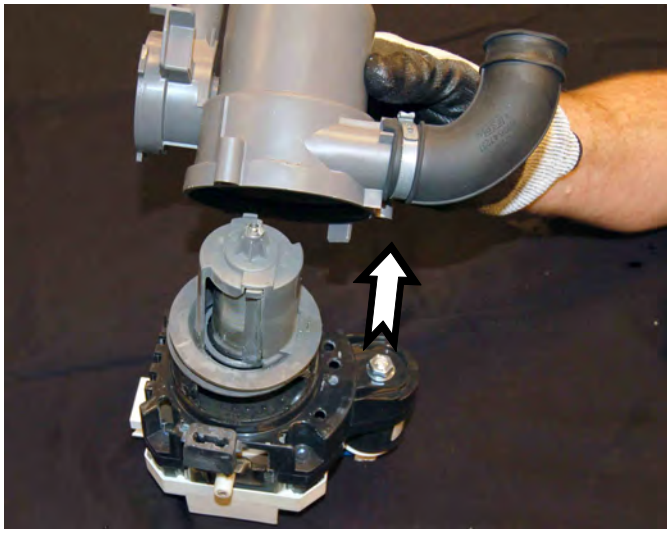

Figure 8

NOTE: The pump housing is keyed to the motor assembly for ease of reassembly.

Removing Wash Motor & Rotating Inlet Filter

10. Remove RIF Filter Assembly - Lift up and remove the filter assembly from the motor assembly.

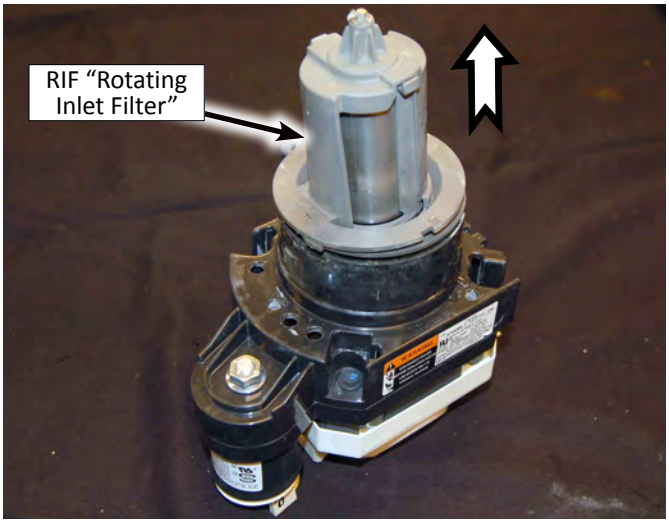

Figure 9

NOTE: The Rotating Inlet Filter is keyed to the motor assembly for ease of reassembly.

11. Remove Impeller Assembly - Figure 10 shows the motor and impeller assembly.

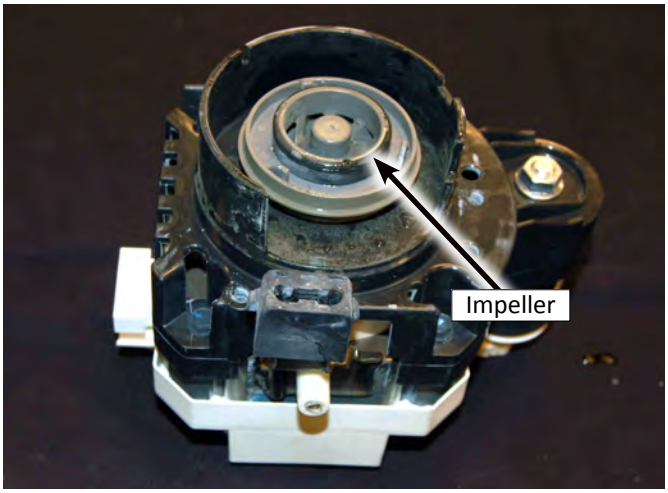

Figure 10

12. To remove the impeller; insert a screwdriver into the motor housing vent to prevent the rotor from turning. Firmly grasp the impeller with the other hand and remove it from the motor shaft. See Figure 11.

Figure 11

NOTE: The impeller service kit includes the impeller, stationary seat face seal, and rotating seat face seal. See Figure 12.

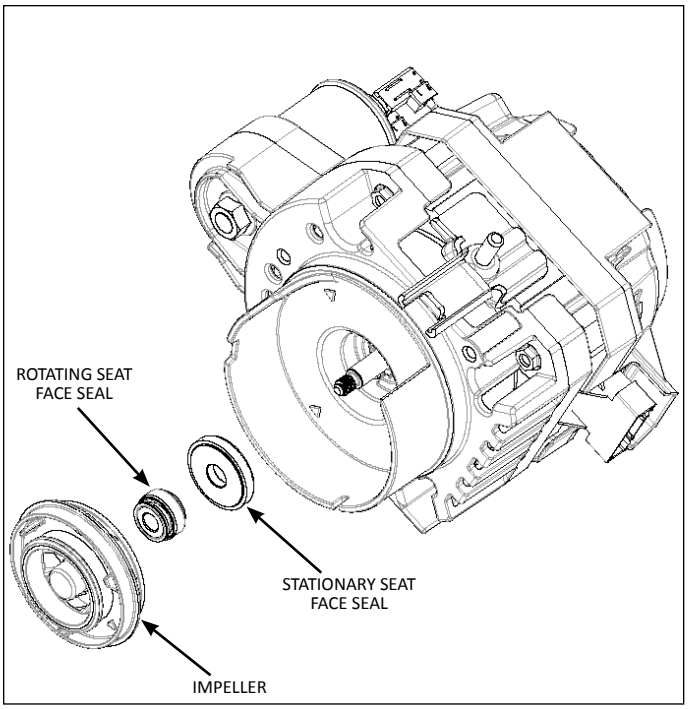

Figure 12

Rotating Inlet Filter

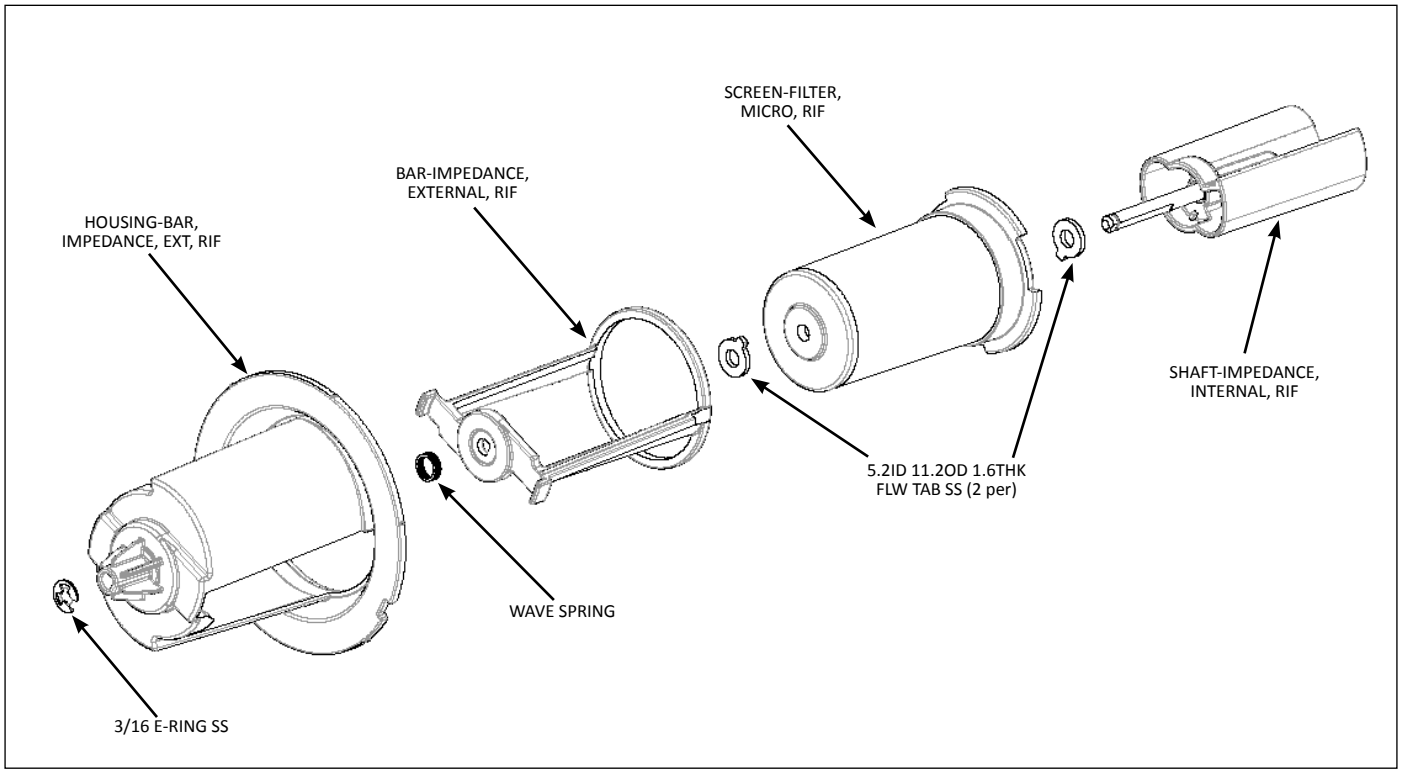

Figure 13

Section 5: Diagnostics & Troubleshooting

This section provides diagnostic, fault codes, and troubleshooting information for the “KitchenAid 2015 Microfiltration Dishwashers.”

- Diagnostics & Troubleshooting Safety
- Service Diagnostic Cycle
- Service Diagnostic Cycle Notes
- Customer Cycle Operation
- Service Diagnostics with Error Codes
- Service Error Codes
- Troubleshooting Guide

For Service Technician Use Only

⚠ DANGER

Electrical Shock Hazard

Only authorized technicians should perform diagnostic voltage measurements.

After performing voltage measurements, disconnect power before servicing.

Failure to follow these instructions can result in death or electrical shock.

⚠ WARNING

Electrical Shock Hazard

Disconnect power before servicing.

Replace all parts and panels before operating.

Failure to do so can result in death or electrical shock.

Voltage Measurement Safety Information

When performing live voltage measurements, you must do the following:

- Verify the controls are in the off position so that the appliance does not start when energized.
- Allow enough space to perform the voltage measurements without obstructions.
- Keep other people a safe distance away from the appliance to prevent potential injury.
- Always use the proper testing equipment.
- After voltage measurements, always disconnect power before servicing.

IMPORTANT: Electrostatic Discharge (ESD) Sensitive Electronics
ESD problems are present everywhere. Most people begin to feel an ESD discharge at approximately 3000V. It takes as little as 10V to destroy, damage, or weaken the main control assembly. The new main control assembly may appear to work well after repair is finished, but a malfunction may occur at a later date due to ESD stress.

- **Use an anti-static wrist strap. Connect wrist strap to green ground connection point or unpainted metal in the appliance**

-OR-

- **Touch your finger repeatedly to a green ground connection point or unpainted metal in the appliance.**
- **Before removing the part from its package, touch the anti-static bag to a green ground connection point or unpainted metal in the appliance.**
- **Avoid touching electronic parts or terminal contacts; handle electronic control assembly by edges only.**
- **When repackaging main control assembly in anti-static bag, observe above instructions.**

IMPORTANT SAFETY NOTICE — "For Technicians only"

This service data sheet is intended for use by persons having electrical, electronic, and mechanical experience and knowledge at a level generally considered acceptable in the appliance repair trade. Any attempt to repair a major appliance may result in personal injury and property damage. The manufacturer or seller cannot be responsible, nor assume any liability for injury or damage of any kind arising from the use of this data sheet.

For Service Technician Use Only

Service Diagnostic Cycle

INTERVAL	28	27	26	25	24	23	22	21	20	19	18	17	16	15	14	13	12	11	10	9	8	7	6	5	4	3	2	1	
CYCLE, OPTION, AND STATUS LEDs																													
1 HOUR WASH	1HR	1HR		1HR		1HR		1HR		1HR		1HR		1HR		1HR		1HR		1HR		1HR		1HR		1HR		1HR	
NORMAL	NRM		NRM		NRM		NRM		NRM		NRM		NRM				NRM		NRM		NRM		NRM		NRM		NRM		
START/RESUME	STA	STA	STA	STA	STA	STA	STA	STA	STA	STA	STA	STA	STA	STA	STA	STA	STA	STA	STA	STA	STA	STA	STA	STA	STA	STA	STA	STA	
RUNNING	RUN	RUN	RUN	RUN	RUN	RUN	RUN	RUN	RUN	RUN	RUN	RUN	RUN	RUN	RUN	RUN	RUN	RUN	RUN	RUN	RUN	RUN	RUN	RUN	RUN	RUN	RUN	RUN	
HI TEMP	HIT		HIT		HIT	HIT	HIT		HIT		HIT		HIT		HIT		HIT		HIT		HIT		HIT		HIT		HIT		
DRY OPTION	DRY	DRY		DRY				DRY		DRY		DRY		DRY		DRY		DRY		DRY		DRY		DRY		DRY		DRY	
SANITIZED NOTE 5	SAN								(SAN)																(SAN)				
CLEAN NOTES 5, 6, 8, 9,10	CLN	CLN	CLN	CLN	CLN			DIV	(CLN)		(CLN)			(CLN)			(CLN)	(CLN)						(CLN)			CLN	CLN	
ALL OTHER CYCLE, OPTION AND STATUS LEDs	ALL																												
INTERVAL TIME (MIN:SEC) TOTAL TIME (MAX)23:01	0:06	1:21	1:21	1:21	1:21	0:10	0:40	0:05	0:13	0:05	1:00	2:00	0:30	1:00	0:30	2:00	1:00	1:00	0:05	0:02	0:05	0:02	1:46	0:06	2:15	0:15	1:21	1:21	STANDBY
SOIL SENSING INTERVALS AND SENSOR CHECKS																													
THERMISTOR (TEMPERATURE SENSOR) CHECK INTERVAL NOTE 5								THR																					
OWI (SOIL SENSOR) CHECK INTERVALS NOTE 6										OWI			OWI										OWI						
(NOTE: OWI HAS TERMISTOR BUILT IN - SEE ABOVE)																													
DIVERTER POSITION SENSOR CHECK NOTE 3												DIV																	
SALT LEVEL REED SWITCH/ FLOWMETER INPUT TEST NOTE 11																									SRM				
LOWER SPRAY ARM CHECK(IF PRESENT) NOTE 10																		LSA											
LOADS																													
PILOT RELAY		CUSTOMER ERROR 1	CUSTOMER ERROR 2	CUSTOMER ERROR 3	CUSTOMER ERROR 4		PLT	PLT	PLT	PLT	PLT	PLT	PLT	PLT	PLT	PLT	PLT	PLT	PLT	PLT	PLT	PLT	PLT	PLT	PLT	PLT	SERVICE ERROR 1	SERVICE ERROR 2	
VENT							VNT	VNT	VNT	VNT	VNT	VNT	VNT	VNT	VNT	VNT	VNT	VNT	VNT	VNT	VNT	VNT	VNT	VNT	VNT	VNT			
FILL							FIL	FIL	FIL																				
WASH MOTOR								WSH	WSH		WSH	WSH		WSH	WSH	WSH	WSH	WSH											
DETERGENT/RINSE AID DISPENSER											DSP																		
DIVERTER							(DIV)				DIV	DIV	(DIV)		(DIV)	(DIV)													
DIVERTER POSITION							UPR	UPR	UPR	UPR	ON	ON	UPR	UPR	TZ	LOW	LOW	LOW	LOW	LOW	LOW	LOW	LOW	LOW	LOW	LOW			
DRAIN MOTOR																			DRN		DRN		DRN	DRN					
HEATER																HTR	HTR	HTR							HTR	HTR			
FAN MOTOR (IF PRESENT) NOTE 7										FAN			FAN	FAN												FAN			
REGEN (IF PRESENT)																							REG						
LOWER SPRAY ARM MOTOR (IF PRESENT) NOTE 9																LSA	LSA	LSA											
SERVICE DIAGNOSTIC NOTES	2	1	1	1	1	4	8		5	6 7	3 6	3	3 7	6 7	3	3		9	10				6	6	11		1	1	

See Service Diagnostic Cycle Notes on following page.

For Service Technician Use Only

Service Diagnostic Cycle Notes

1 To invoke the Diagnostics Cycle, perform the following while in standby:

- Press any 3 keys in the sequence 1-2-3-1-2-3-1-2-3 with no more than 1 second between key presses.
- The Service Diagnostics Cycle will start when the door is closed.
- To rapid advance 1 interval at a time, press the Start/Resume key. Rapid advance may skip sensor checks as some checks require 2 complete intervals.

NOTE: While you are in the Diagnostic Cycle, the Start/Resume feature is turned Off (for example, Auto Resume after door interrupts) and the Start/Resume key becomes an interval advance key.

- Invoking Service Diagnostics Cycle clears all status and last run information from memory and restores defaults. It also forces the next cycle to be a sensor calibration cycle.
- Drain and wash motors will pulsate on and off.
- Last run cycles and options returned to default.
- Last run Delay returns to the lowest delay increment.
- Calibration cycle may force an extra rinse to occur prior to Final Rinse (to assure clear water), then calibrates the OWI and the fill amount during the final rinse.
- Operating state returns to Standby upon completing or terminating the Service Diagnostics Cycle.

2 Turn on all LEDs immediately upon receiving the entry sequence (even if the door is open) for 5 seconds as a display test. Turn off all LEDs for 1 second prior to reporting customer error history.

3. Diverter will be on continuously in intervals 17 and 18. In all other diverter intervals, diverter will be on only until it reaches the intended position for that interval.

4 Press HI TEMP key in this interval to clear customer error history.

5 Thermistor (temperature sensor) checks - turn clean LED on if thermistor is in its normal temperature range (32°F to 167°F [0°C to 75°C]). Turn sanitized LED on if fill temperature is above 85°F (29°C).

6 OWI (optical soil sensor) checks:

- Check OWI sensor for the presence of water during the 5-second pause in interval 19 and turn on the Clean LED in interval 18 if water detected.
- Check OWI sensor for presence of bulk soil during pause interval 16 and turn on the Clean LED in interval 15 if bulk soil detected.
- Drain until OWI sensor sees the presence of air or a maximum of 1:52 during interval 6 and turn on the Clean LED in interval 5 if air detected.

7 Fan Motor on during upper rack washing intervals to reduce moisture buildup in door.

8 Turn on Clean LED in this interval to indicate that vent current is detected.

9 Turn CLEAN LED on in this interval to indicate that the spray arm motor is working (if present).

- Lower spray arm (LSA) models are identified by the main lower spray arm that does not freely rotate by hand.
- Look for error code (F9E4) at end of service cycle for a faulty LSA motor.

NOTE: Inoperable LSA motor will cause LSA sensor to indicate bad status. See 9-4 error code table to diagnose.

10 Turn CLEAN LED on in this interval to indicate that the spray arm sensor is working (if present).

- Lower spray arm (LSA) models are identified by finger-shaped sensor in tub, protruding from bottom left side of sump.

NOTE: Inoperable LSA motor will cause LSA sensor to indicate bad status. See 9-4 error code table to diagnose.

11 Turn CLEAN LED on in this interval to indicate that the salt level reed switch is closed.

Customer Cycle Operation

To quickly advance through customer cycles, invoke the Rapid Advance mode by pressing HIGH TEMP - HEATED DRY - HIGH TEMP - HEATED DRY, after starting the cycle. Then, press START/RESUME to advance through cycle intervals.

NOTE: Rapid Advance mode is automatically enabled in the Service Diagnostic cycle, but must be manually invoked in customer cycles.

For Service Technician Use Only

Service Diagnostics With Error Codes

Entry Sequence:

Press any 3 keys in the sequence 1-2-3-1-2-3-1-2-3 with no more than 1 second between key presses.
NOTE: Some models have replaced the “CLEAN” LED with “COMPLETE.”
If no error, “Clean” LED stays on for 5 seconds or display shows “F-” or “E-”.

INTERVAL 28	DISPLAY TEST - ALL LEDS ON	INTERVAL 28

↓

INTERVAL 27	ERROR 1 - MOST RECENT			INTERVAL 27
SHOW FUNCTION CODE →	PAUSE →	SHOW PROBLEM CODE →	PAUSE	Repeat 3 times unless advanced by Start key.
Count the Clean LED flashes →	2 seconds →	Count Clean LED flashes →	5 seconds	
OR ON DISPLAY MODELS				
Read “F#” on Display →	0.5 seconds →	Read “E#” on Display →	1 second	

↓

INTERVAL 26	ERROR 2			INTERVAL 26
SHOW FUNCTION CODE →	PAUSE →	SHOW PROBLEM CODE →	PAUSE	Repeat 3 times unless advanced by Start key.
Count the Clean LED flashes →	2 seconds →	Count Clean LED flashes →	5 seconds	
OR ON DISPLAY MODELS				
Read “F#” on Display →	0.5 seconds →	Read “E#” on Display →	1 second	

↓

INTERVAL 25	ERROR 3			INTERVAL 25
SHOW FUNCTION CODE →	PAUSE →	SHOW PROBLEM CODE →	PAUSE	Repeat 3 times unless advanced by Start key.
Count the Clean LED flashes →	2 seconds →	Count Clean LED flashes →	5 seconds	
OR ON DISPLAY MODELS				
Read “F#” on Display →	0.5 seconds →	Read “E#” on Display →	1 second	

↓

INTERVAL 24	ERROR 4 - OLDEST			INTERVAL 24
SHOW FUNCTION CODE →	PAUSE →	SHOW PROBLEM CODE →	PAUSE	Repeat 3 times unless advanced by Start key.
Count the Clean LED flashes →	2 seconds →	Count Clean LED flashes →	5 seconds	
OR ON DISPLAY MODELS				
Read “F#” on Display →	0.5 seconds →	Read “E#” on Display →	1 second	

↓

INTERVAL 23	10 seconds pause	Hi Temp LED will be on	INTERVAL 23
	Press Hi Temp key to clear errors. Hi Temp LED will blink twice to indicate errors have been cleared.		

↓

INTERVAL 22-3	Service Diagnostics Cycle	INTERVAL 22-3
	Turns on loads and checks sensors.	

↓

INTERVAL 2	SERVICE CYCLE ERROR 1 A tone will play when service error code 1 is displayed			INTERVAL 2
SHOW FUNCTION CODE →	PAUSE →	SHOW PROBLEM CODE →	PAUSE	Repeat 3 times unless advanced by Start key.
Count the Clean LED flashes →	2 seconds →	Count Clean LED flashes →	5 seconds	
OR ON DISPLAY MODELS				
Read “F#” on Display →	0.5 seconds →	Read “E#” on Display →	1 second	

↓

INTERVAL 1	SERVICE CYCLE ERROR 2			INTERVAL 1
SHOW FUNCTION CODE →	PAUSE →	SHOW PROBLEM CODE →	PAUSE	Repeat 3 times unless advanced by Start key.
Count the Clean LED flashes →	2 seconds →	Count Clean LED flashes →	5 seconds	
OR ON DISPLAY MODELS				
Read “F#” on Display →	0.5 seconds →	Read “E#” on Display →	1 second	

NOTE: Once error codes are extracted, refer to the “Service Error Codes” table to diagnose and correctly resolve the root cause condition.

For Service Technician Use Only

Service Error Codes

⚠ DANGER

Electrical Shock Hazard

Only authorized technicians should perform diagnostic voltage measurements.

After performing voltage measurements, disconnect power before servicing.

Failure to follow these instructions can result in death or electrical shock.

FUNCTION CODE	PROBLEM CODE	CAUSES	WHAT TO CHECK
1 - CONTROL	1-PILOT STUCK ON	CONTROL DETECTED K2 PILOT RELAY STUCK CLOSED.	1. UNPLUG DISHWASHER OR DISCONNECT POWER. 2. CHECK ALL LOADS ON K2 PILOT RELAY FOR SHORTS. 3. REPLACE CONTROL AND ALL SHORTED COMPONENTS.
	2-CONTROL SOFTWARE ISSUE	DAMAGED OR CORRUPTED MEMORY ON CONTROL BOARD; INCOMPATIBLE SOFTWARE COMPONENTS INSIDE MICRO.	1. UNPLUG DISHWASHER OR DISCONNECT POWER. 2. REPLACE CONTROL BOARD.
2-USER INTERFACE	1-STUCK KEY	CONTROL DETECTED STUCK KEY(S) IN KEYPAD OR KEYPAD CONNECTION. **NOTE**: IF ANY KEYS ARE STUCK, THE STUCK KEY(S) WILL BE IGNORED AND AN ERROR RECORDED TO SERVICE HISTORY, BUT NO ALERT TO CUSTOMER.	CHECK RESPONSIVENESS OF EACH KEY. 1. IF SOME KEYS DO NOT RESPOND, THEN: - UNPLUG DISHWASHER OR DISCONNECT POWER. - DISASSEMBLE DOOR AND DISCONNECT KEYPAD CONNECTION FROM CONTROL OR LCD DISPLAY MODULE. - VERIFY ALL OTHER CONNECTIONS TO CONTROL ARE MADE. - REASSEMBLE DOOR BUT DO NOT CLOSE DOOR. - PLUG IN DISHWASHER OR RECONNECT POWER. - WAIT AT LEAST 7 SECONDS FOR CONTROL TO POWER UP OMPLETELY. - CLOSE DISHWASHER DOOR AND MONITOR CONTROL RESPONSE: A. IF CONTROL IS OK (NO LONGER SEES STUCK KEYS WITH KEYPAD UNPLUGGED), IT WILL RESPOND BY TURNING ON THE DRAIN MOTOR FOR 2 MINUTES. REPLACE KEYPAD AND CONSOLE. B. IF CONTROL IS NOT OK (STILL SEES STUCK KEYS WITH KEYPAD UNPLUGGED), IT WILL NOT TURN ON DRAIN MOTOR. WAIT FOR AT LEAST 10 SECONDS. IF STILL NO DRAIN RESPONSE, THEN REPLACE CONTROL OR LCD DISPLAY MODULE (WHICHEVER ONE THE KEYPAD WAS CONNECTED TO). 2. IF ALL KEYS APPEAR OK OR INTERMITTENT, AND KEYPAD IS CAPACITIVE TOUCH TYPE, THEN: - VERIFY TUB BRACKETS ARE SCREWED TO UNDERSIDE OF COUNTERTOP AND NOT HANGING OVER KEYS (IF SCREW HEAD TOO CLOSE, RELOCATE SCREW TO ALTERNATE HOLE). - CHECK FOR EVIDENCE OF MOISTURE OR DEBRIS ON THE SURFACE OF THE KEYS. IF EVIDENT, CLEAN AND INSTRUCT CUSTOMER ABOUT KEEPING SURFACE CLEAN. - CHECK ERROR CODE HISTORY FOR FAN ERROR 10-3 AS POTENTIAL CAUSE OF CONDENSATION ON USER INTERFACE. - VERIFY PRESENCE OF VENT CURRENT IF MODEL HAS A VENT WAX MOTOR. REFER TO “LEAKS OR DRIPS ON CABINET OR FLOOR” IN THE “TROUBLESHOOTING GUIDE” SECTION.

For Service Technician Use Only

Service Error Codes (continued)

FUNCTION CODE	PROBLEM CODE	CAUSES	WHAT TO CHECK
3-THERMISTOR/ OWI	1-OPEN	- OPEN CONNECTION OR COMPONENT IN TEMPERATURE SENSING CIRCUIT. - OPEN OR FAULTY TEMPERATURE SENSOR - TEMPERATURE SENSOR INPUT ON CONTROL.	1. CHECK OPERATION OF TEMPERATURE SENSOR IN SERVICE DIAGNOSTICS CYCLE. 2. UNPLUG DISHWASHER OR DISCONNECT POWER. 3. CHECK ALL COMPONENTS AND CONNECTIONS IN THE TEMPERATURE SENSING CIRCUIT WITH METER, FIX/REPLACE OPEN CONNECTION / PART.
	2-SHORTED	- INCOMING WATER TEMPERATURE ABOVE 167F(75 C) - SHORTED CONNECTION OR COMPONENT IN TEMPERATURE SENSING CIRCUIT. - SHORTED OR FAULTY TEMPERATURE SENSOR. - TEMPERATURE SENSOR INPUT ON CONTROL.	1. CHECK INCOMING WATER TEMPERATURE. 2. CHECK OPERATION OF TEMPERATURE SENSOR IN SERVICE DIAGNOSTICS CYCLE. 3. UNPLUG DISHWASHER OR DISCONNECT POWER. 4. CHECK ALL COMPONENTS AND CONNECTIONS IN THE TEMPERATURE SENSING CIRCUIT WITH METER, FIX/REPLACE SHORTED WIRES / PART. (SEE OWI SENSOR STRIP CIRCUIT)
3-THERMISTOR/ OWI	3-FAILED CALIBRATION	OWI FAILURE	1. RUN SERVICE DIAGNOSTICS TO CHECK OWI OPERATION. OWI SHOULD SEE LOW SOIL WITH CLEAR WATER. 2. CHECK OWI LENS SURFACE. CLEAN IF NEEDED. 3. UNPLUG DISHWASHER OR DISCONNECT POWER. 4. CHECK ALL CONNECTIONS IN SOIL SENSING CIRCUIT WITH METER. FIX/REPLACE BAD CONNECTION/PART. **NOTE:** RUN DIAGNOSTICS CYCLE AFTER INSTALLING NEW OWI TO FORCE CALIBRATION ON NEXT REGULAR WASH CYCLE.
		DRAIN HOSE CHECK VALVE NOT SEALING.	DIRTY WATER BACKS INTO DISHWASHER AFTER DRAINING. 1. DISCONNECT DRAIN HOSE AT PLUMBING CONNECTION. 2. ELEVATE HOSE ABOVE DISHWASHER AND FILL WITH WATER. IF WATER FLOWS INTO DISHWASHER, REPLACE ENTIRE DRAIN LOOP (INSTALL AS HIGH AS POSSIBLE AND ATTACH TO UNDERSIDE OF COUNTERTOP IF POSSIBLE).
4-WASH MOTOR	3-MOTOR NOT RUNNING	LOOSE CONNECTION IN MOTOR CIRCUIT AND/1- OR FAULTY WASH MOTOR.	1. CHECK OPERATION OF WASH MOTOR DURING DIAGNOSTICS. 2. UNPLUG DISHWASHER OR DISCONNECT POWER. 3. CHECK RESISTANCES OF CONNECTIONS IN THE WASH CIRCUIT. 4. CHECK FOR LOOSE CONNECTIONS OR REPLACE WASH MOTOR.
		CONTROL MOTOR DRIVE CIRCUIT OR SENSE CIRCUIT.	1. UNPLUG DISHWASHER OR DISCONNECT POWER. 2. IF METER CHECK OF WASH MOTOR CIRCUIT SHOWS NORMAL RESISTANCE AND STILL NOT GETTING POWER TO THE WASH MOTOR, REPLACE CONTROL.
5-DOOR SWITCH	1-DOOR STUCK OPEN	DOOR WAS NOT LATCHED WITHIN 4 SECONDS OF PRESSING THE START / RESUME KEY.	INSTRUCT CUSTOMER. REFER TO USE & CARE GUIDE.
		LOOSE CONNECTION IN DOOR SWITCH CIRCUIT AND/OR DOOR SWITCH CONTACTS STUCK OPEN AND / OR DOOR SWITCH NOT MAKING CONTACT: - SLOPPY DOOR LATCH ASSEMBLY (WHICH CAN BE AGGRAVATED BY HIGH DOOR CLOSURE FORCE KEEPING STRIKE PLATE FROM FULLY SEATING). - DOOR SWITCH (HIGH RESISTANCE).	1. CHECK STRIKE PLATE AND DOOR CLOSURE FORCE. VERIFY DOOR SEAL IS SEATED PROPERLY. CHECK FOR INTERFERENCE BETWEEN DISH RACKS AND DOOR. TRY BENDING STRIKE PLATE DOWN FOR BETTER ENGAGEMENT. 2. UNPLUG DISHWASHER OR DISCONNECT POWER. 3. CHECK RESISTANCES OF DOOR SWITCH CONTACTS AND ALL CONNECTIONS IN THE DOOR SWITCH CIRCUIT WITH METER, WHILE OPENING AND CLOSING THE DOOR LATCH. - IF HIGH RESISTANCE WITH DOOR CLOSED, CHECK / FIX LOOSE CONNECTIONS. 4. MEASURE RESISTANCE OF DOOR SWITCH CONTACTS WHILE CHECKING MECHANICAL OPERATION OF LATCH ASSEMBLY. CHECK FOR BROKEN PLASTIC PIECES ON LATCH ASSEMBLY. REPLACE LATCH IF FAULTY.
		IF NONE OF THE ABOVE	1. WITH DOOR OPEN, VERIFY 13 VDC PRESENT ACROSS P9-5 AND P9-6. 2. IF NO VOLTAGE PRESENT, UNPLUG DISHWASHER OR DISCONNECT POWER AND REPLACE CONTROL.

For Service Technician Use Only

Service Error Codes (continued)

FUNCTION CODE	PROBLEM CODE	CAUSES	WHAT TO CHECK
5-DOOR SWITCH	2-DOOR STUCK CLOSED	CONTROL PROGRAMMED TO NOT START IF IT SUSPECTS THE DOOR SWITCH IS STUCK CLOSED. CONTROL LOOKS FOR THE DOOR SWITCH TO OPEN BETWEEN CYCLES. - CUSTOMER DIDN'T OPEN THE DOOR BETWEEN CYCLES OR DOOR SWITCH CONTACTS STUCK CLOSED.	1. OPEN AND CLOSE DOOR AND THEN PRESS START/RESUME KEY. IF WORKS NOW, INSTRUCT CUSTOMER TO OPEN DOOR BETWEEN CYCLES. 2. UNPLUG DISHWASHER OR DISCONNECT POWER. 3. MEASURE RESISTANCE OF DOOR SWITCH CONTACTS WHILE CHECKING MECHANICAL OPERATION OF LATCH ASSEMBLY.
6-INLET WATER	1-LOW/NO WATER (MECHANICAL PROBLEM)	NO WATER TO DISHWASHER.	VERIFY WATER SUPPLY IS TURNED ON AND SUPPLY LINE ADEQUATE.
		BOWLS OR POTS LOADED OR FLIPPED UPSIDE DOWN AND CAPTURED WASH WATER.	INSTRUCT CUSTOMER ON LOADING. REFER TO USE AND CARE GUIDE.
		DRAIN LOOP DETACHED FROM TUB AND/OR IMPROPER DRAIN CONNECTION.	CHECK FOR WATER SIPHONING OUT OF UNIT: 1. ALLOW DISHWASHER TO COMPLETE NORMAL FILL. 2. DRAIN FOR 5-10 SECONDS BY PRESSING CANCEL/DRAIN. 3. OPEN DOOR AND CONFIRM WATER DOES NOT SIPHON OUT OF UNIT. IF IT DOES, CONFIRM DRAIN LOOP IS ATTACHED TO SIDE OF DISHWASHER AND DRAIN HOSE IS CONNECTED TO A DRAIN AT LEAST 50.8 CM (20 INCHES) OFF THE FLOOR.
		WATER LEAKING FROM DISHWASHER	CHECK FOR LEAKS UNDER DISHWASHER.
6-INLET WATER	1-LOW/NO WATER (MECHANICAL PROBLEM) CONTINUED	FILL VALVE OR WATER LINE PLUGGED WITH DEBRIS.	TURN OFF WATER SUPPLY TO DISHWASHER DISCONNECT WATER LINE TO INLET VALVE AND INSPECT/CLEAN THE INLET SCREEN OF FILL VALVE AND RECONNECT WATER.
		OVERFILL SWITCH STUCK IN "OVERFILL" POSITION AND/OR DISHWASHER NOT LEVEL.	CHECK OTHER ERROR CODES TO SEE IF 6-4 ALSO OCCURRED. SEE 6 - 4 ERROR CODE BELOW.
		FILL VALVE ELECTRICAL PROBLEM.	CHECK OTHER ERROR CODES TO SEE IF 6-2 ALSO OCCURRED. SEE 6 - 2 ERROR CODE BELOW.
	2-FILL VALVE ELECTRICAL PROBLEM	LOOSE CONNECTION IN FILL VALVE CIRCUIT AND/OR OPEN FILL VALVE SOLENOID.	UNPLUG DISHWASHER OR DISCONNECT POWER AND CHECK RESISTANCES OF FILL VALVE SOLENOID AND ALL CONNECTIONS IN THE FILL CIRCUIT WITH METER. FIX / REPLACE OPEN CONNECTION / PART.
		OPEN FUSE ON CONTROL TO FILL VALVE.	REFER TO FUSE SERVICE AND RESISTANCE CHECK ON PAGE 6-4 IN "TESTING" SECTION.
		FAULTY FILL VALVE DRIVE CIRCUIT ON THE CONTROL.	UNPLUG DISHWASHER OR DISCONNECT POWER AND REPLACE CONTROL.
	3-SUDS/AIR IN PUMP	TOO MANY SUDS.	1. ALLOW UNIT TO FILL AND WASH FOR 1 MINUTE. OPEN DOOR AND CHECK FOR EXCESSIVE SUDSING. 2. CONFIRM USING PROPER DISHWASHER DETERGENT, NOT HAND DETERGENT. 3. CHECK FOR EXCESSIVE RINSE AID LEAKAGE.
		BOWLS OR POTS LOADED OR FLIPPED UPSIDE DOWN AND CAPTURED WASH WATER.	INSTRUCT CUSTOMER ON LOADING. REFER TO USE AND CARE MANUAL.
		WATER LEAKING FROM DISHWASHER.	CHECK FOR LEAKS UNDER DISHWASHER.
		DIVERTER DISK IN SUMP IS MISSING.	REMOVE LOWER SPRAY ARM, TURBO ZONE ASSEMBLY, REAR FEEDTUBE AND OUTLET COVER AND VERIFY WHETHER THE RED DIVERTER DISK IS INSTALLED.
	4-FLOAT SWITCH OPEN	OVERFILL SWITCH STUCK IN "OVERFILL" (OPEN) POSITION AND/OR DISHWASHER NOT LEVEL.	REMOVE ANY ITEMS STUCK UNDER FLOAT. VERIFY THAT THE FLOAT MOVES FREELY AND YOU HEAR THE "CLICK" OF THE SWITCH CONTACTS. CHECK/ADJUST LEVEL OF THE DISHWASHER.
		DRAIN HOSE CHECK VALVE NOT SEALING.	WATER BACKS INTO DISHWASHER AFTER DRAINING AND ELEVATES WATER LEVEL. 1. DISCONNECT DRAIN HOSE AT PLUMBING CONNECTION. 2. ELEVATE HOSE ABOVE DISHWASHER AND FILL WITH WATER. IF WATER FLOWS INTO DISHWASHER, REPLACE ENTIRE DRAIN LOOP (INSTALL AS HIGH AS POSSIBLE AND ATTACH TO UNDERSIDE OF COUNTERTOP IF POSSIBLE).

For Service Technician Use Only

Service Error Codes (continued)

FUNCTION CODE	PROBLEM CODE	CAUSES	WHAT TO CHECK
6-INLET WATER	4-FLOAT SWITCH OPEN	FILL VALVE TRIAC ON CONTROL SHORTED.	IF STILL FILLING WHILE DOOR IS OPEN, FILL VALVE IS MECHANICALLY STUCK OPEN (SEE BELOW). IF NOT FILLING WITH THE DOOR OPEN, CHECK OPERATION IN SERVICE DIAGNOSTICS TEST CYCLE. ADVANCE SERVICE CYCLE UNTIL DETERGENT DISPENSER OPENS. FILL VALVE SHOULD BE OFF. LISTEN TO SEE IF DISHWASHER STILL FILLING. IF STILL FILLING, UNPLUG DISHWASHER OR DISCONNECT POWER AND REPLACE CONTROL.
		FILL VALVE MECHANICALLY STUCK OPEN.	CONFIRM DISHWASHER FILLS WHILE DOOR IS OPEN. IF YES, UNPLUG DISHWASHER OR DISCONNECT POWER, TURN OFF WATER TO DISHWASHER, REPLACE FILL VALVE. AND TURN WATER BACK ON.
		TOO MANY SUDS.	1. ALLOW UNIT TO FILL AND WASH FOR 1 MINUTE. OPEN DOOR AND CHECK FOR EXCESSIVE SUDSING. 2. INSTRUCT CUSTOMER IF USING IMPROPER DISHWASHER DETERGENT (HAND DETERGENT). 3. DISCONNECT POWER & REPLACE DISPENSER IF SEE EXCESSIVE RINSE AID LEAKAGE.
		OPEN FUSE F9 TO FILL VALVE AND OTHER TRIAC LOADS.	REFER TO FUSE SERVICE AND RESISTANCE CHECK ON PAGE 6-4 IN “TESTING” SECTION.
	7-FLOWMETER	DISCONNECTED OR DAMAGED FLOWMETER	1. DISCONNECT POWER OR UNPLUG UNIT. 2. CHECK CONNECTIONS AT SALT LEVEL SENSOR AND AT FLOWMETER. 3. USE METER TO CHECK FOR FLOWMETER SWITCH CLOSED. USE METER TO CHECK SALT LEVEL SENSOR. SWITCH IS OPEN WHEN SALT RESERVOIR IS FILLED AND CLOSED WHEN SALT RESERVOIR IS LOW/EMPTY. 4. DISCONNECT FLOWMETER AND LEAVE SALT SENSOR CONNECTED. APPLY A MAGNET TO SIDE OF THE SALT TANK NEAR THE SENSOR CONNECTION TO FORCE THE SWITCH CLOSED. 5. WITH THE MAGNET IN PLACE, RUN THE COMPLETE SERVICE DIAGNOSTICS CYCLE. IF THE SANITIZED LED TURNS ON IN INTERVAL 3, THE CONTROL IS GOOD; REPLACE THE FLOWMETER ASSEMBLY. IF THE SANITIZED LED DOES NOT TURN ON, THE CONTROL INPUT HAS FAILED; REPLACE THE CONTROL.
	8-REGEN VALVE ELECTRICAL PROBLEM	LOOSE CONNECTION IN REGEN VALVE CIRCUIT, AND/OR OPEN REGEN VALVE SOLENOID.	UNPLUG DISHWASHER OR DISCONNECT POWER AND CHECK RESISTANCES OF REGEN VALVE SOLENOID AND ALL CONNECTIONS IN THE REGEN VALVE CIRCUIT. FIX/REPLACE OPEN CONNECTION/ PART.
		OPEN FUSE ON CONTROL TO REGEN VALVE.	REFER TO FUSE SERVICE AND RESISTANCE CHECK ON PAGE 6-4 IN “TESTING” SECTION.
		REGEN VALVE DRIVE CIRCUIT ON THE CONTROL.	UNPLUG DISHWASHER OR DISCONNECT POWER AND REPLACE CONTROL.
7-HEATING	1-NO HEAT	CONTROL PROGRAMMED TO DISABLE HEATER, BUT CONTINUE RUNNING CYCLES, IF IT DETECTS A WATER HEATING PROBLEM.	RUNNING DIAGNOSTICS CLEARS THE CONTROL AND ALLOWS THE HEATER TO TURN ON AGAIN, WATER HEATING PROBLEM MUST BE CORRECTED, OR THE CONTROL WILL DISABLE THE HEATER AGAIN. SEE HEATER CIRCUIT PROBLEM BELOW.
		HEATER CIRCUIT PROBLEM: - OPEN IN HEATER. - OPEN CONNECTION OR COMPONENT IN HEATER CIRCUIT.	1. UNPLUG DISHWASHER OR DISCONNECT POWER. 2. MEASURE RESISTANCE OF HEATER AND ALL COMPONENTS AND CONNECTIONS IN WATER HEATING CIRCUIT/ HEAT DRY CIRCUIT. FIX / REPLACE OPEN CONNECTION / PART.
		HEATER DRIVE CIRCUIT ON THE CONTROL.	UNPLUG DISHWASHER OR DISCONNECT POWER AND REPLACE CONTROL.
	2-HEATER STUCK ON	HEATER DRIVE CIRCUIT ON THE CONTROL.	1. UNPLUG DISHWASHER OR DISCONNECT POWER AND REPLACE CONTROL. 2. INSPECT HEATER AND CONNECTIONS FOR OVERHEATING / SHORTING. IF EVIDENCE OF OVERHEATING OR SHORTS EXISTS, REPLACE.

For Service Technician Use Only

Service Error Codes (continued)

FUNCTION CODE	PROBLEM CODE	CAUSES	WHAT TO CHECK
8-DRAINING	1-SLOW DRAIN	OBSTRUCTED DRAIN HOSE OR PATH	1. UNPLUG DISHWASHER OR DISCONNECT POWER. 2. CHECK FOR BLOCKAGES FROM SUMP CHECK VALVE TO CUSTOMER'S PLUMBING. POTENTIAL ITEMS, PLUGGED GARBAGE DISPOSER OR PLUG NOT KNOCKED OUT, DRAIN LOOP CHECK VALVE STUCK, AND/OR PLUGGED HOSES.
		DRAIN PUMP IMPELLER FRACTURED	1. UNPLUG DISHWASHER OR DISCONNECT POWER. 2. REMOVE DRAIN PUMP AND CHECK IMPELLER (NORMALLY THERE IS SOME UNEVEN RESISTANCE). IF IT IS STRIPPED, REPLACE DRAIN PUMP.
	2-DRAIN MOTOR ELECTRICAL PROBLEM	LOOSE CONNECTION IN DRAIN MOTOR CIRCUIT AND/OR OPEN DRAIN MOTOR WINDING.	UNPLUG DISHWASHER OR DISCONNECT POWER AND CHECK RESISTANCES OF DRAIN MOTOR WINDING AND ALL CONNECTIONS IN THE DRAIN CIRCUIT. FIX / REPLACE OPEN CONNECTION / PART.
		DEBRIS STUCK IN DRAIN MOTOR IMPELLER.	1. UNPLUG DISHWASHER OR DISCONNECT POWER. 2. REMOVE DRAIN MOTOR AND DISLODGE DEBRIS FROM IMPELLER.
		OPEN FUSE ON CONTROL TO DRAIN MOTOR.	REFER TO FUSE SERVICE AND RESISTANCE CHECK ON PAGE 6-4 IN "TESTING" SECTION.
		DRAIN MOTOR DRIVE CIRCUIT ON THE CONTROL.	UNPLUG DISHWASHER OR DISCONNECT POWER AND REPLACE CONTROL.
	3-DRAIN STUCK ON	DRAIN MOTOR DRIVE CIRCUIT ON THE CONTROL.	1. UNPLUG DISHWASHER OR DISCONNECT POWER. 2. INSPECT DRAIN MOTOR AND CONNECTIONS FOR OVERHEATING/ SHORTING. IF EVIDENCE OF OVERHEATING/SHORTING EXISTS, REPLACE.
9-DIVERTER	1-CAN'T FIND POSITION	CORRODED OR LOOSE CONNECTION IN DIVERTER SENSOR / MOTOR CIRCUIT, OR OPEN/ SHORTED SENSOR/MOTOR.	1. CHECK OPERATION IN SERVICE DIAGNOSTICS CYCLE. LISTEN FOR CAM CLICKING AS IT ROTATES OR INSPECT SHAFT WITH MIRROR TO SEE IF ROTATING DURING DIVERTER INTERVAL. IF ROTATING, THEN LIKELY THE SENSOR CIRCUIT. 2. UNPLUG DISHWASHER OR DISCONNECT POWER AND CHECK CONNECTIONS IN DIVERTER SENSOR AND MOTOR CIRCUIT WITH METER. FIX / REPLACE CONNECTIONS / PARTS. 3. INSPECT DIVERTER SENSOR FOR EVIDENCE OF WATER OR CONTAMINANTS; IF YES, REPLACE.
		MECHANICAL BINDING OF DIVERTER SHAFT / DISC.	CHECK OPERATION OF DIVERTER MOTOR DURING DIAGNOSTICS. INSPECT DIVERTER SHAFT WITH MIRROR IF MOTOR APPEARS TO BE ON (HUMS, VIBRATES) BUT YOU SEE LIMITED ROTATION, THEN REPLACE DIVERTER AND SEAL.
		OPEN FUSE ON CONTROL TO DIVERTER MOTOR.	REFER TO FUSE SERVICE AND RESISTANCE CHECK ON PAGE 6-4 IN "TESTING" SECTION.
		DIVERTER MOTOR DRIVE CIRCUIT ON THE CONTROL.	UNPLUG DISHWASHER OR DISCONNECT POWER AND REPLACE CONTROL.
	2-STUCK ON	DIVERTER DRIVE CIRCUIT ON THE CONTROL.	1. UNPLUG DISHWASHER OR DISCONNECT POWER AND REPLACE CONTROL. 2. INSPECT DIVERTER MOTOR AND CONNECTIONS FOR OVERHEATING / SHORTING. IF EVIDENCE OF OVERHEATING / SHORTING EXISTS, REPLACE.
	3-DISC MISSING	CONTROL DETECTED DIVERTER DISK IN SUMP IS MISSING.	REMOVE LOWER SPRAY ARM, TURBO ZONE ASSEMBLY, REAR FEED TUBE AND OUTLET COVER AND VERIFY THE ROUND DIVERTER DISK IS INSTALLED.
	4-LOWER SPRAY ARM ERROR	MECHANICAL BINDING OR BLOCKING OF SPRAY ARM.	1. CHECK FOR AND REMOVE ANY BLOCKAGE OF LOWER SPRAY ARM (UTENSILS, POT HANDLES). 2. RUN THE SERVICE DIAGNOSTIC CYCLE AND CHECK FOR THE LSA OPERATION/FAULT DETECTION (NOTE 10). IF FAILURE STILL EXISTS THEN: - UNPLUG DISHWASHER OR DISCONNECT POWER. CHECK WIRING CONNECTION OR DAMAGE AT CONTROLLED LOWER SPRAY ARM SENSOR. - REFER TO FUSE SERVICE AND RESISTANCE CHECK ON PAGE 6-4 IN "TESTING" SECTION. 1 (REPLACE CONTROL IF OPEN). - CHECK FOR OPEN OR SHORTED LOWER SPRAY ARM MOTOR WINDING RESISTANCE. REPLACE DIVERTER MODULE.
		CORRODED OR LOOSE CONNECTION IN SPRAY ARM SENSOR/MOTOR CIRCUIT.	
		OPEN FUSE ON CONTROL TO SPRAY ARM MOTOR.	
		SPRAY ARM DRIVE CIRCUIT ON THE CONTROL.	

For Service Technician Use Only

Service Error Codes (continued)

FUNCTION CODE	PROBLEM CODE	CAUSES	WHAT TO CHECK
10-OTHER	1-DISPENSER ELECTRICAL PROBLEM	LOOSE CONNECTION IN DISPENSER CIRCUIT AND/OR OPEN DISPENSER SOLENOID.	UNPLUG DISHWASHER OR DISCONNECT POWER AND CHECK RESISTANCES OF DISPENSER SOLENOID AND ALL CONNECTIONS IN THE DISPENSER CIRCUIT. FIX / REPLACE OPEN CONNECTION / PART.
		OPEN FUSE ON CONTROL TO DISPENSER.	REFER TO FUSE SERVICE AND RESISTANCE CHECK ON PAGE 6-4 IN "TESTING" SECTION.
		DISPENSER DRIVE CIRCUIT ON THE CONTROL.	UNPLUG DISHWASHER OR DISCONNECT POWER AND REPLACE CONTROL.
	3-DRYING FAN ERROR	LOOSE CONNECTION IN FAN CIRCUIT AND/OR OPEN FAN MOTOR.	UNPLUG DISHWASHER OR DISCONNECT POWER AND CHECK RESISTANCES OF FAN MOTOR AND ALL CONNECTIONS IN THE FAN CIRCUIT. FIX / REPLACE OPEN CONNECTIONS OR FAN.
		FAN DRIVE CIRCUIT ON THE CONTROL.	UNPLUG DISHWASHER OR DISCONNECT POWER AND REPLACE CONTROL.

Troubleshooting Guide

⚠ DANGER

Electrical Shock Hazard

Only authorized technicians should perform diagnostic voltage measurements.

After performing voltage measurements, disconnect power before servicing.

Failure to follow these instructions can result in death or electrical shock.

NOTES:

- For resistance checks, refer to the "Dishwasher Strip Circuits" in Section 6.
- For checking operation with diagnostics, refer to "Service Diagnostics Cycle" section.

CUSTOMER DESCRIPTION	POTENTIAL CAUSES	CHECK	RELATED ERROR CODES
CLEAN LED FLASHES	CONTROL PROGRAMMED WITH SELF DIAGNOSTICS.	READ ERROR CODE FROM THE DISHWASHER AND REFER TO "SERVICE ERROR CODES" TABLE. RUN SERVICE DIAGNOSTICS TEST CYCLE TO READ FULL HISTORY OF ERROR CODES.	
WON'T RUN or POWER UP ("DEAD" KEYPAD/CONSOLE) - NO OPERATION - NO KEYPAD RESPONSE - NO LEDS OR DISPLAY	NO POWER TO UNIT OR BAD CONNECTION.	CHECK FUSES, CIRCUIT BREAKERS AND JUNCTION BOX CONNECTIONS.	
	LOOSE CONNECTIONS IN DISHWASHER POWER UP CIRCUIT OR BETWEEN KEYPAD(S) AND CONTROL.	1. UNPLUG DISHWASHER OR DISCONNECT POWER. 2. CHECK CONTINUITY POWER CONNECTIONS TO CONTROL AND CONNECTIONS BETWEEN KEYPAD(S) AND CONTROL.	
	MODEL HAS AN LCD DISPLAY AND THE CONTROL HAS BEEN EXCHANGED FOR ONE THAT IS NOT COMPATIBLE WITH THE LCD DISPLAY MODULE.	UNPLUG DISHWASHER OR DISCONNECT POWER. VERIFY CORRECT CONTROL IS INSTALLED. CONTROL SHOULD HAVE NO 4-PIN USER INTERFACE CONNECTOR PRESENT AT P1B IF IT IS CONFIGURED FOR AN LCD MODEL . REPLACE CONTROL.	
	CONTROL DETECTED DOOR SWITCH PROBLEM.	REFER TO "SERVICE ERROR CODES" TABLE.	5-1
	USER INTERFACE OR CONTROL	1. UNPLUG DISHWASHER OR DISCONNECT POWER. 2. REPLACE UI/CONSOLE AND/OR CONTROL.	

For Service Technician Use Only

Troubleshooting Guide (continued)

CUSTOMER DESCRIPTION	POTENTIAL CAUSES	CHECK	RELATED ERROR CODES
WON'T RUN AND LED FOR START/RESUME KEY IS BLINKING SLOWLY	BY DESIGN, IF THE DOOR IS OPENED FOR MORE THAN 5 SECONDS OR POWER IS INTERRUPTED DURING A CYCLE, THE USER MUST PRESS THE START/RESUME KEY TO RESUME OPERATION.	INSTRUCT CUSTOMER. REFER TO USE & CARE MANUAL.	
	START/RESUME KEY NOT RESPONDING.	SEE "ONE OR MORE KEYS WON'T RESPOND".	
	CONTROL DETECTED DOOR SWITCH PROBLEM.	REFER TO SERVICE ERROR CODES TABLE.	**5-1**
WON'T RUN AND ALL LEDS ON	SOFTWARE / HARDWARE INCOMPATIBILITY PROBLEM WITH CONTROL.	REFER TO SERVICE ERROR CODES TABLE.	**1-2**
WON'T START AND START/ RESUME KEY LED FLASHES 3 TIMES WHEN START/ RESUME KEY IS PRESSED	CONTROL LOOKING FOR DOOR TO OPEN BETWEEN CYCLES: - CUSTOMER HAS NOT OPENED DOOR SINCE LAST CYCLE. - DOOR SWITCH CONTACTS STUCK CLOSED.	REFER TO SERVICE ERROR CODES TABLE.	**5-2**
WON'T ACCEPT KEY PRESSES AND CONTROL LOCK LED ON	CONTROL LOCKOUT FEATURE ACCIDENTALLY TURNED ON BY CUSTOMER.	INSTRUCT CUSTOMER. REFER TO USE & CARE GUIDE. PRESS & HOLD CONTROL LOCK KEY 5 SEC TO TURN ON/OFF.	
ONE OR MORE KEYS WON'T RESPOND OR UNUSUAL LED/ DISPLAY / KEY BEHAVIOR	STUCK KEY OR SHORT CIRCUIT(S) IN KEYPAD OR IN CONTROL'S INPUT LINES THAT READ THE KEYS.	REFER TO SERVICE ERROR CODES TABLE.	**2-1**
	CAPACITIVE TOUCH KEYPAD ADHESIVE COMING LOOSE FROM CONSOLE.	1. UNPLUG DISHWASHER OR DISCONNECT POWER. 2. INSPECT KEYPAD BOARD FOR SEPARATION FROM CONSOLE. REPLACE KEYPAD AND CONSOLE IF SEPARATION IS SEEN.	
	LOOSE CONNECTIONS BETWEEN KEYPAD AND CONTROL AND / OR BENT OR CONTAMINATED CONNECTOR PINS.	1. UNPLUG DISHWASHER OR DISCONNECT POWER. 2. INSPECT CONNECTIONS IN USER INTERFACE CIRCUITS. RE-CONNECT LOOSE CONNECTIONS. REPLACE PART(S) IF PINS DAMAGED OR CONTAMINATED.	
	EXCESSIVE CONDENSATION ON USER INTERFACE PARTS DUE TO VENT AND/OR FAN PROBLEM.	CHECK ERROR HISTORY FOR 10-3 FAN ERROR. REFER TO SERVICE ERROR CODES TABLE. VERIFY PRESENCE OF VENT CURRENT IF MODEL HAS A VENT WAX MOTOR. REFER TO "LEAKS OR DRIPS ON CABINET OR FLOOR."	**10-3**
	USER INTERFACE	1. UNPLUG DISHWASHER OR DISCONNECT POWER. 2. REPLACE USER INTERFACE CONSOLE ASSEMBLY.	
DISHWASHER BEEPS CONSTANTLY (FOR MODELS WITH BEEPERS)	USER OPENED DOOR DURING CYCLE AND CLOSED DOOR WITHOUT PRESSING START / RESUME TO RESUME CYCLE.	INSTRUCT CUSTOMER. DISHWASHER CONTROL IS DESIGNED TO BEEP IF DISHWASHER IS IN "CYCLE INTERRUPT" MODE WITH DOOR LATCHED. CONTROL WILL STOP BEEPING WHEN DOOR IS OPENED AND/OR START / RESUME KEY IS PRESSED TO RESUME CYCLE.	
	NORMAL BEEPER OPERATION IS EXCESSIVE TO CUSTOMER.	INSTRUCT CUSTOMER HOW TO TURN BEEPER OFF AND ON. PRESS AND HOLD HI TEMP KEY FOR 3 SECONDS (TONE SOUNDS).	
LONG CYCLES AND/OR STUCK IN CERTAIN PART OF CYCLE	AS PART OF NORMAL OPERATION, THE DISHWASHER PAUSES 2 OR 3 TIMES DURING THE CYCLE FOR THERMAL HOLDS AND ADVANCES ONCE TEMPERATURE IS MET.	INSTRUCT CUSTOMER. EXPLAIN THERMAL HOLDS AND HOW THE CYCLE PAUSES WHEN THEY OCCUR.	
	OWI SOIL SENSOR PICKING HIGH SOIL CYCLE TOO OFTEN.	1. RUN SERVICE DIAGNOSTICS CYCLE TO CHECK IF OWI SHOWING HIGH SOIL WITH CLEAR WATER. 2. CHECK LENS SURFACE. CLEAN IF NEEDED. 3. UNPLUG DISHWASHER OR DISCONNECT POWER. 4. REPLACE OWI & RUN DIAGNOSTICS AFTER INSTALLING NEW OWI TO FORCE CALIBRATION ON NEXT WASH CYCLE.	
	DIVERTER PROBLEM PREVENTED WATER FROM HEATING (PLASTIC TUBS MODELS ONLY).	REFER TO SERVICE ERROR CODES TABLE.	**9-1** **9-2**
	A WATER HEATING PROBLEM COULD CAUSE LONG CYCLES BUT WILL TYPICALLY CAUSE A "WATER HEATING FAULT".	REFER TO SERVICE ERROR CODES TABLE.	**7-1**

For Service Technician Use Only

Troubleshooting Guide (continued)

CUSTOMER DESCRIPTION	POTENTIAL CAUSES	CHECK	RELATED ERROR CODES
LONG CYCLES AND/OR STUCK IN CERTAIN PART OF CYCLE	HEATER TAKES A LONG TIME TO HEAT WATER WITH LOW VOLTAGE.	CHECK FOR AT LEAST 100 VAC AT POWER SOURCE.	
	INCOMING WATER UNDER 84° F (29° C)	1. BE SURE DISHWASHER IS CONNECTED TO THE HOT WATER SUPPLY. 2. CONFIRM TEMPERATURE AT SINK. RECOMMEND 120° F (49° C). 3. UNPLUG DISHWASHER OR DISCONNECT POWER AND CHECK ALL CONNECTIONS AND MEASURE RESISTANCE IN TEMPERATURE SENSING CIRCUIT. REPLACE OWI IF RESISTANCE IS HIGH.	**6-6**
	SUDS OR AIR IN PUMP REQUIRES REPEATED WASH PERIODS.	REFER TO SERVICE ERROR CODES TABLE.	**6-3**
	OWI OR NTC SENSOR PROBLEM.	REFER TO SERVICE ERROR CODES TABLE.	**3-1, 3-3**
LEDS OR DISPLAYS RUN FOR SHORT TIME (BUT NO LOADS RUNNING) AND THEN SHUTS OFF	UNIT IS IN SALES DEMO MODE.	CHECK OPERATION OF CANCEL KEY; IF NO CANCEL LED RESPONSE TO MULTIPLE CANCEL KEY PRESSES, THE CONTROL IS LIKELY IN SALES DEMO MODE. RUN SERVICE DIAGNOSTICS CYCLE TO CLEAR DEMO MODE.	
	OPEN F9 (TRIAC LOAD FUSE) ON CONTROL DISABLED LOADS.	REFER TO FUSE SERVICE AND RESISTANCE CHECK ON PAGE 6-4 IN "TESTING" SECTION.	
CAN START A CYCLE BUT ONLY RUNS FOR A SHORT TIME - CYCLE DOES NOT COMPLETE (CLEAN LED OR COMPLETED MAY BLINK)	CONTROL CANCELLED CYCLE DUE TO ERROR DETECTED WITH WASH MOTOR OR LOW WATER.	REFER TO SERVICE ERROR CODES TABLE.	**4-4** **6-3**
	UNIT IN SALES DEMO MODE	RUN SERVICE DIAGNOSTICS CYCLE TO CLEAR DEMO MODE.	
WILL NOT DRAIN OR EXCESS WATER LEFT IN DISHWASHER. NOTE: CHECK ERROR HISTORY. IF NO ERROR CODES FOR ELECTRICAL PROBLEMS, PROBLEM IS MECHANICAL. DO NOT REPLACE CONTROL.	DRAIN LOOP CHECK VALVE NOT SEALING.	1. DISCONNECT DRAIN HOSE AT PLUMBING CONNECTION. 2. ELEVATE HOSE ABOVE DISHWASHER AND FILL WITH WATER. IF WATER FLOWS INTO DISHWASHER, REPLACE ENTIRE DRAIN LOOP. INSTALL AS HIGH AS POSSIBLE.	
	CUSTOMER MISUNDERSTANDS WATER LEVEL AFTER DRAIN.	INSTRUCT CUSTOMER. SUMP WILL NORMALLY HAVE ABOUT 2.4 CM (1 INCH) OF WATER REMAINING IN FILTER CUP HOLE AFTER CYCLE.	
	DRAINING PROBLEM	REFER TO SERVICE ERROR CODES TABLE.	**8-1 , 8-2**
DETERGENT NOT DISPENSING OR DETERGENT LEFT IN DISPENSER NOTE: CHECK ERROR HISTORY IF NO ERROR CODES FOR ELECTRICAL PROBLEMS, PROBLEM IS MECHANICAL. DO NOT REPLACE CONTROL	ITEM IN LOWER RACK BLOCKED LID OR BLOCKED SPRAY OF WATER TO DISPENSER.	INSTRUCT CUSTOMER ON PROPER DISH LOADING.	
	MECHANICAL BINDING OF DISPENSER LID.	1. UNPLUG DISHWASHER OR DISCONNECT POWER. 2. CHECK/REPLACE DISPENSER.	
	LID LATCH BINDING DUE TO EXCESS DETERGENT IN MECHANISM.	INSTRUCT CUSTOMER ON PROPER DISPENSER FILLING.	
	DISPENSER ELECTRICAL PROBLEM	REFER TO SERVICE ERROR CODES TABLE.	**10-1**
	CONTROL CANCELLED CYCLE BEFORE DISPENSING DUE TO ERROR DETECTED WITH WASH MOTOR OR LOW WATER.	REFER TO SERVICE ERROR CODES TABLE.	**4-3, 6-3**
POOR WASH	CYCLE SELECTION OF CUSTOMER NOT APPROPRIATE FOR DISH LOAD.	INSTRUCT CUSTOMER ON CYCLE SELECTION. RECOMMEND "HIGH TEMP" OPTION FOR WASH PERFORMANCE BOOST.	
	PLUGGED OR DAMAGED COARSE SCREEN.	INSPECT COARSE SCREEN IN SUMP. CLEAN AND REPLACE AS NECESSARY. INSTRUCT CUSTOMER ON SIZE OF SOILS DISHWASHERS CAN PROPERLY DISPOSE THROUGH DRAIN SYSTEM.	
	LITTLE OR NO WASH PUMP FLOW.	DIVERTER PROBLEM. REFER TO SERVICE ERROR CODES TABLE.	**9-1, 9-2**
		MICRO FILTER MAY BE PLUGGED BY HARD WATER DEPOSITS OR OTHER MATERIALS. CLEAN FILTER. IF THERE IS APPARENT DAMAGE, REPLACE FILTER. IF THERE IS HARD WATER, INSTRUCT CUSTOMER ON PROPER MAINTENANCE.	

For Service Technician Use Only

Troubleshooting Guide (continued)

CUSTOMER DESCRIPTION	POTENTIAL CAUSES	CHECK	RELATED ERROR CODES
POOR WASH	SPRAY ARMS NOT ROTATING OR PLUGGED.	1. CHECK ARM ROTATION. IF ARMS BLOCKED BY DISH ITEM, INSTRUCT CUSTOMER. ALSO CHECK FOR CORRECT UPPER SPRAY ARM ALIGNMENT WITH DOCKING STATION LOCATED ON FEED TUBE AT BACK TUB WALL. 2. CHECK NOZZLES; IF THEY ARE PLUGGED, CLEAN NOZZLES. PLUGGING MAY BE CAUSED BY HARD WATER BUILD-UP IN WATER DELIVERY SYSTEM OR DAMAGED PUMP FILTER. INSPECT WATER DELIVERY SYSTEM FOR HARD WATER BUILD-UP, CLEAN. INSPECT AND SERVICE PUMP FILTER. 3. CONTROLLED LOWER SPRAY ARM MOTOR FAILED. CHECK SPRAY ARM MOVING DURING DIAGNOSTICS CYCLE.	**9-4**
	POOR WASH DUE TO DRAINING, DISPENSING AND/OR TEMPERATURE PROBLEMS.	SEE “WILL NOT DRAIN OR EXCESS WATER LEFT IN UNIT”, OR “DETERGENT NOT DISPENSING OR DETERGENT LEFT IN DISPENSER”, OR DETAILS ON TEMPERATURE SENSING IN “LONG CYCLES AND/OR STUCK IN CERTAIN PART OF CYCLE”.	
	CONTROL CANCELLED CYCLE DUE TO ERROR DETECTED WITH WASH MOTOR OR LOW WATER.	REFER TO SERVICE ERROR CODES TABLE.	**4-3** **6-3**
	SOIL SENSOR PROBLEM	REFER TO SERVICE ERROR CODES TABLE NOTE: EVEN IF NO ERROR CODE RECORDED, CONFIRM OWI PASSES ALL OWI CHECKS IN SERVICE DIAGNOSTICS CYCLE AND SEE CHECKS FOR ERROR 3-3.	**3-2** **3-3**
	DIVERTER PROBLEM	REFER TO SERVICE ERROR CODES TABLE.	**9-1** **9-2**
	DIVERTER DISC MISSING	REMOVE OUTLET COVER AND INSPECT FOR RED PLASTIC DISC THROUGH HOLES IN OUTLET. INSTALL NEW DISC IF MISSING.	
	HEATING PROBLEM	REFER TO SERVICE ERROR CODES TABLE.	**7-1**
	SOFTENER PROBLEM (ONLY SOME MODELS)	REFER TO SERVICE ERROR CODES TABLE.	**6-8**
FILM OR SPOTS ON GLASSES AND/OR DISHES	CUSTOMER NOT USING RINSE AID AND/OR HEATED DRY.	CHECK RINSE AID GAGE LEVEL ON DISPENSER. INSTRUCT CUSTOMER HOW TO FILL AND MONITOR ADD OR USE RINSE AID.	
	RINSE AID DISPENSER PROBLEM.	REFER TO SERVICE ERROR CODES TABLE.	**10-1**
FILM OR SPOTS ON GLASSES AND/OR DISHES CONTINUED	HARD WATER LEAVING FILM ON DISHES.	CHECK WATER HARDNESS. IF HARD, INSTRUCT CUSTOMER TO USE DISHWASHER CLEANER PER PACKAGING INSTRUCTIONS. ALSO RECOMMEND THE 1 HR WASH CYCLE.	
		FOR MODELS WITH WATER SOFTENER: CHECK FOR “ADD SALT” LED AT END OF CYCLE. IF ON, ADD SALT AND INSTRUCT CUSTOMER.	
		FOR MODELS WITH WATER SOFTENER: REGEN VALVE ELECTRICAL PROBLEM; REFER TO SERVICE ERROR CODES TABLE.	**6-8**
	DETERGENT CARRYOVER OR OVER-SUDSING.	CHECK WATER HARDNESS. IF BELOW 10 GRAINS, THEN INSTRUCT CUSTOMER TO USE LESS DETERGENT AND RECOMMEND THE “1 HR WASH” CYCLE.	**6-3**
	ETCHING OF GLASS FROM TOO MUCH DETERGENT AT TOO HIGH OF TEMPERATURE.	CHECK WATER HARDNESS. IF BELOW 10 GRAINS, THEN INSTRUCT CUSTOMER TO USE LESS DETERGENT AND RECOMMEND THE “1 HR WASH” CYCLE.	
	DIVERTER PROBLEMS	REFER TO SERVICE ERROR CODES TABLE.	**9-1, 9-2**
	DRAIN LOOP CHECK VALVE NOT SEALING.	1. DISCONNECT DRAIN HOSE AT PLUMBING CONNECTION. 2. ELEVATE HOSE ABOVE DISHWASHER AND FILL WITH WATER. IF WATER FLOWS INTO DISHWASHER, REPLACE ENTIRE DRAIN LOOP. INSTALL AS HIGH AS POSSIBLE AND ATTACH TO UNDERSIDE OF COUNTERTOP IF POSSIBLE.	

For Service Technician Use Only

Troubleshooting Guide (continued)

CUSTOMER DESCRIPTION	POTENTIAL CAUSES	CHECK	RELATED ERROR CODES
POOR DRY	CUSTOMER NOT USING RINSE AID AND/OR DISPENSER EMPTY.	CHECK RINSE AID GAUGE LEVEL ON DISPENSER; INSTRUCT CUSTOMER HOW TO FILL AND MONITOR, ADD OR USE RINSE AID.	
	CUSTOMER NOT USING HEATED DRY OPTION.	RECOMMEND USE OF HEATED DRY OR SMART DRY TO CUSTOMER.	
	RINSE AID DISPENSER PROBLEM	REFER TO SERVICE ERROR CODES TABLE.	**10-1**
	VENT STUCK CLOSED DUE TO PILOT RELAY STUCK ON (NOT ALL MODELS).	REFER TO SERVICE ERROR CODES TABLE.	**1-1**
	DIVERTER PROBLEM PREVENTED WATER FROM HEATING IN FINAL RINSE (PLASTIC TUB MODELS ONLY).	REFER TO SERVICE ERROR CODES TABLE.	**9-1, 9-2**
	FAN PROBLEM (ON MODELS WITH FAN)	REFER TO SERVICE ERROR CODES TABLE.	**10-3**
	CONTROL CANCELLED CYCLE DUE TO ERROR DETECTED WITH WASH MOTOR OR LOW WATER.	REFER TO SERVICE ERROR CODES TABLE.	**4-3, 6-3**
	HEATING PROBLEM	REFER TO SERVICE ERROR CODES TABLE.	**7-1**
SANITIZED LED BLINKS OR INCOMPLETE SANITIZATION MESSAGE AT END OF CYCLE (CONTROL COULD NOT CONFIRM SANITIZATION ACHIEVED)	DOOR OPENED DURING FINAL RINSE OR DRY.	INSTRUCT CUSTOMER.	
	INCOMING WATER UNDER 84° F (29° C)	1. BE SURE DISHWASHER IS CONNECTED TO THE HOT WATER SUPPLY. 2. CONFIRM TEMPERATURE AT SINK. RECOMMEND 120° F (49° C). 3. UNPLUG DISHWASHER OR DISCONNECT POWER AND CHECK ALL CONNECTIONS AND MEASURE RESISTANCE IN TEMPERATURE SENSING CIRCUIT. REPLACE OWI IF RESISTANCE IS HIGH.	**6-6**
	HEATING PROBLEM	REFER TO SERVICE ERROR CODES TABLE.	**7-1**
	THERMISTOR / OWI SENSOR PROBLEM	REFER TO SERVICE ERROR CODES TABLE.	**3-1, 3-2**
	INTERMITTENT DOOR SWITCH / LATCH CONNECTION.	REFER TO SERVICE ERROR CODES TABLE.	
	LINE VOLTAGE TOO LOW TO HEAT FAST ENOUGH.	CHECK POWER SOURCE. CONFIRM AT LEAST 100 VAC.	
	AIR PRESSURE SURGES IN DISHWASHER DUE TO WASHING WITH HIGH SUDS CAUSES BRIEF OPENING OF DOOR SWITCH CONTACTS DURING FINAL RINSE.	REFER TO SERVICE ERROR CODES TABLE.	**6-3**
MELTED DISHWARE AND/ OR SPRAY ARM AND/OR DISHWASHER ALWAYS HOT	CUSTOMER USES NON-DISHWASHER SAFE DISHES OR LOADS PLASTIC DISHES DIRECTLY OVER HEATER.	INSTRUCT CUSTOMER.	
	TEMPERATURE SENSING PROBLEM.	REFER TO SERVICE ERROR CODES TABLE.	**3-1**
	WATER HEATING PROBLEM, HEATER STUCK ON.	REFER TO SERVICE ERROR CODES TABLE.	**7-2**
	WATER HEATER DISPLACED FROM MOUNTING CLIP AND / OR PULLED OFF CENTER.	INSPECT HEATER. ADJUST BACK INTO POSITION IF NEEDED.	

For Service Technician Use Only

Troubleshooting Guide (continued)

CUSTOMER DESCRIPTION	POTENTIAL CAUSES	CHECK	RELATED ERROR CODES
NOISY OPERATION	SPRAY ARM STALLED OR BLOCKED AND SPRAYING ON THE DOOR.	- INSTRUCT CUSTOMER IF BLOCKED. - CHECK SPRAY ARM ROTATION AND INSPECT FOR PLUGGED NOZZLES. IF PLUGGED, CLEAN NOZZLES AND CONFIRM FILTERS INSTALLED PROPERLY. - CONTROLLED LOWER SPRAY ARM MOTOR FAILED. CHECK SPRAY ARM MOVING DURING DIAGNOSTICS CYCLE.	**9-4**
	DIVERTER PROBLEM	REFER TO SERVICE ERROR CODES TABLE.	**9-1** **9-2,9-3**
	NO OR LOW WATER	REFER TO SERVICE ERROR CODES TABLE.	**6-1, 6-2** **6-3, 6-4**
	DRAINS TOO LONG	1. LONG DRAIN DUE TO OWI SENSOR PROBLEM. REFER TO SERVICE ERROR CODES TABLE FOR 3-3. 2. SLOW DRAIN PROBLEM. REFER TO SERVICE ERROR CODES TABLE FOR 8-1.	**3-3, 8-1**
	LOOSE CONNECTION IN VENT CIRCUIT AND/ OR OPEN VENT WAX MOTOR.	UNPLUG DISHWASHER OR DISCONNECT POWER AND CHECK RESISTANCES OF VENT WAX MOTOR AND ALL CONNECTIONS IN THE VENT CIRCUIT. FIX/REPLACE OPEN CONNECTION/PART.	
	OPEN FUSE ON CONTROL TO VENT	REFER TO FUSE SERVICE AND RESISTANCE CHECK ON PAGE 6-4 IN "TESTING" SECTION.	
	VENT DRIVE CIRCUIT ON CONTROL	UNPLUG DISHWASHER OR DISCONNECT POWER AND REPLACE CONTROL.	
	FAN RUNS (MAKES NOISE) AFTER CYCLE COMPLETED (ON MODELS WITH FAN).	DISHWASHER IS DESIGNED TO KEEP FAN RUNNING AFTER CYCLE TO PREVENT MOISTURE BUILDUP IN DISHWASHER. FAN WILL TURN OFF IF DOOR IS OPENED LONGER THAN 5 SEC. INSTRUCT CUSTOMER.	
	EXCESSIVE FAN NOISE DUE TO FAULTY FAN (ON MODELS WITH FAN).	1. CHECK FAN OPERATION DURING SERVICE DIAGNOSTICS TEST CYCLE. 2. UNPLUG DISHWASHER OR DISCONNECT POWER. 3. REPLACE FAN IF DOES NOT SPIN FREELY.	
LEAKS OR DRIPS ON CABINET OR FLOOR	LOOSE CONNECTION IN VENT CIRCUIT AND/ OR OPEN VENT WAX MOTOR.	UNPLUG DISHWASHER OR DISCONNECT POWER AND CHECK RESISTANCES OF VENT WAX MOTOR AND ALL CONNECTIONS IN THE VENT CIRCUIT. FIX/REPLACE OPEN CONNECTION/PART.	
	OPEN FUSE ON CONTROL TO VENT.	REFER TO FUSE SERVICE AND RESISTANCE CHECK ON PAGE 6-4 IN "TESTING" SECTION.	
	VENT DRIVE CIRCUIT ON CONTROL.	UNPLUG DISHWASHER OR DISCONNECT POWER AND REPLACE CONTROL.	
	FAN PROBLEM (ON MODELS WITH FAN)	REFER TO SERVICE ERROR CODES TABLE.	**10-3**
	TOO MANY SUDS	REFER TO SERVICE ERROR CODES TABLE.	**6-3, 6-4**
	LEAKING DISHWASHER	CHECK DOOR / TUB GASKET AND ALL WATER CONNECTIONS UNDER DISHWASHER. REFER TO SERVICE ERROR TABLE.	**6-1, 6-3**
	UNIT NOT LEVEL (LEANING FORWARD) AND WATER SURGES OVER FRONT LIP DURING CYCLE.	CHECK ERROR HISTORY FOR FLOAT ERROR 6-4. ERROR 6-4 IS LIKELY TO OCCUR IF UNIT IS SIGNIFICANTLY OUT OF LEVEL AND LEANING FORWARD. REFER TO SERVICE ERROR TABLE.	**6-4**
	AIR PRESSURE SURGE WHEN DOOR IS OPENED AND IMMEDIATELY CLOSED WHILE DISHWASHER IS HOT CAN FORCE DROPLETS OUT THE VENT DUCT.	INSTRUCT CUSTOMER TO LEAVE DOOR OPEN A FEW MINUTES BEFORE RE-CLOSING IF OPENED WHILE DISHWASHER IS HOT.	

Section 6: Testing

This section provides a wiring diagram, control board specifications, testing procedures and strip circuits the "KitchenAid 2015 Microfiltration Dishwashers."

- Testing Safety
- Wiring Diagram
- Control Board Information
- General Theory of Operation
- Power Check
- Door Switch Circuit
- Fill Circuit
- Dispenser Circuit
- Water Heating/Heat Dry
- Water Sensing w/OWI
- Diverter Motor
- Diverter Sensor/Position Switch
- Wash Motor
- Drain Motor
- Lower Spray Arm Motor
- AC Fan Motor
- Interior LED Lighting
- User Interface (UI)
- Notes

For Service Technician Use Only

⚠ DANGER

Electrical Shock Hazard

Only authorized technicians should perform diagnostic voltage measurements.

After performing voltage measurements, disconnect power before servicing.

Failure to follow these instructions can result in death or electrical shock.

⚠ WARNING

Electrical Shock Hazard

Disconnect power before servicing.

Replace all parts and panels before operating.

Failure to do so can result in death or electrical shock.

Voltage Measurement Safety Information

When performing live voltage measurements, you must do the following:

- Verify the controls are in the off position so that the appliance does not start when energized.
- Allow enough space to perform the voltage measurements without obstructions.
- Keep other people a safe distance away from the appliance to prevent potential injury.
- Always use the proper testing equipment.
- After voltage measurements, always disconnect power before servicing.

IMPORTANT: Electrostatic Discharge (ESD) Sensitive Electronics
ESD problems are present everywhere. Most people begin to feel an ESD discharge at approximately 3000V. It takes as little as 10V to destroy, damage, or weaken the main control assembly. The new main control assembly may appear to work well after repair is finished, but a malfunction may occur at a later date due to ESD stress.

- **Use an anti-static wrist strap. Connect wrist strap to green ground connection point or unpainted metal in the appliance**

-OR-

- **Touch your finger repeatedly to a green ground connection point or unpainted metal in the appliance.**
- **Before removing the part from its package, touch the anti-static bag to a green ground connection point or unpainted metal in the appliance.**
- **Avoid touching electronic parts or terminal contacts; handle electronic control assembly by edges only.**
- **When repackaging main control assembly in anti-static bag, observe above instructions.**

IMPORTANT SAFETY NOTICE — "For Technicians only"

This service data sheet is intended for use by persons having electrical, electronic, and mechanical experience and knowledge at a level generally considered acceptable in the appliance repair trade. Any attempt to repair a major appliance may result in personal injury and property damage. The manufacturer or seller cannot be responsible, nor assume any liability for injury or damage of any kind arising from the use of this data sheet.

For Service Technician Use Only

Wiring Diagram

Schematic shown with door switch and all other normally open contacts open.

* Denotes energy efficient components. Do not substitute.

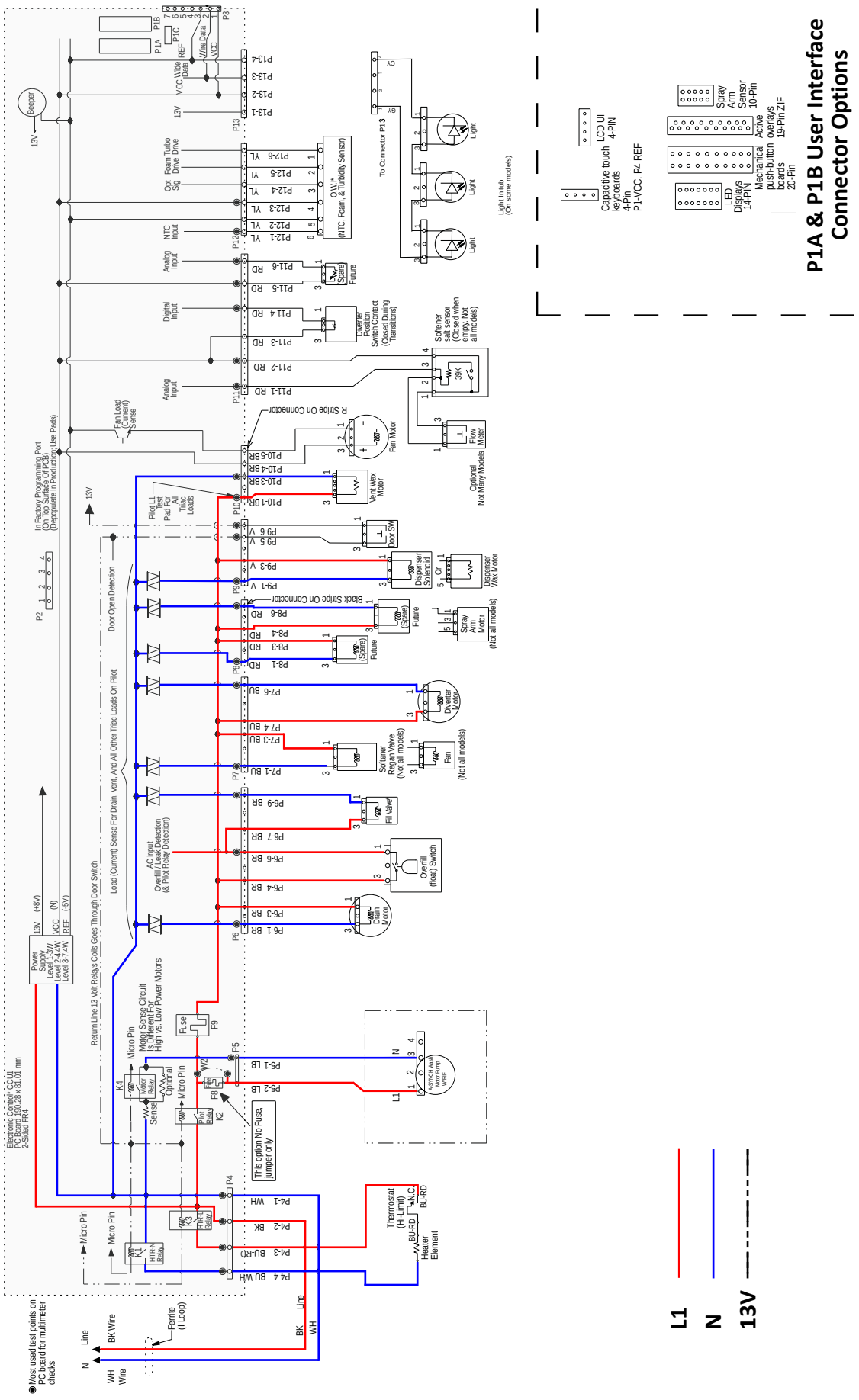

For Service Technician Use Only

⚠ DANGER

Electrical Shock Hazard

Only authorized technicians should perform diagnostic voltage measurements.

After performing voltage measurements, disconnect power before servicing.

Failure to follow these instructions can result in death or electrical shock.

Control Board Information

SPECIFICATIONS

ELECTRICAL SUPPLY:

(Under Load): 60Hz 120V AC

SUPPLY WATER FLOW RATE:

To fill 2 qt (1.9 L) in 27 seconds, 120 psi maximum, 20 psi minimum.

SUPPLY WATER TEMPERATURE:

120°F (49°C) (Before starting a cycle, run water from sink faucet until hot.)

WATER CHARGE:

1.0 gal. (3.9 L) Approximate

LOWER SPRAY ARM ROTATION:

12 TO 40 rpm

UPPER SPRAY ARM ROTATION:

12 TO 30 rpm

Fuse Service & Resistance Check

F9 = SMALL-TRIAC LOAD FUSE

Check operation of loads during the Service Diagnostics cycle.

- ➢ If any of the TRIAC loads work, F9 Fuse is OK.
- ➢ If all TRIAC loads fail to work, F9 Fuse could be open. See Fuse Resistance Check.”

FUSE RESISTANCE CHECK:

1. Unplug the dishwasher or disconnect power.
2. Measure resistance of F9 Fuse.

   NOTE: Fuses are on the bottom of the Control Board but can be checked from the top side. See “Control Pinout” diagram.

   - ➢ If resistance is < 3 Ω, then fuse is OK.
   - ➢ If resistance is > 3 Ω, then fuse is open.

IF THE FUSE IS OPEN:

Inspect and check resistance of all loads on fuse. If any loads are open, shorted, or have evidence of overheating or pinched wires, replace them.

Component Testing

TESTING DISHWASHER COMPONENTS FROM THE CONTROL

Before testing any of the components, perform the following checks:

- The most common cause for mis-diagnosed control failure is poor connections. Therefore, disconnecting, inspecting and reconnecting wires will be necessary throughout test procedures.
- All tests/checks should be made with a VOM or DVM having a sensitivity of 20,000 ohms-per-volt DC, or greater.
- Check all connections before replacing components, looking for broken or loose wires, failed terminals, or wires not pressed into connectors far enough.
- Voltage checks must be made with all connectors attached to the boards.
- Resistance checks must be made with power cord unplugged or power disconnected, and with wiring harness or connectors disconnected from the control.
- The testing procedures in this section may require the use of needle probes to measure voltage. Failure to use needle probes will damage the connectors.

For Service Technician Use Only

ELECTRONIC CONTROL BOARD

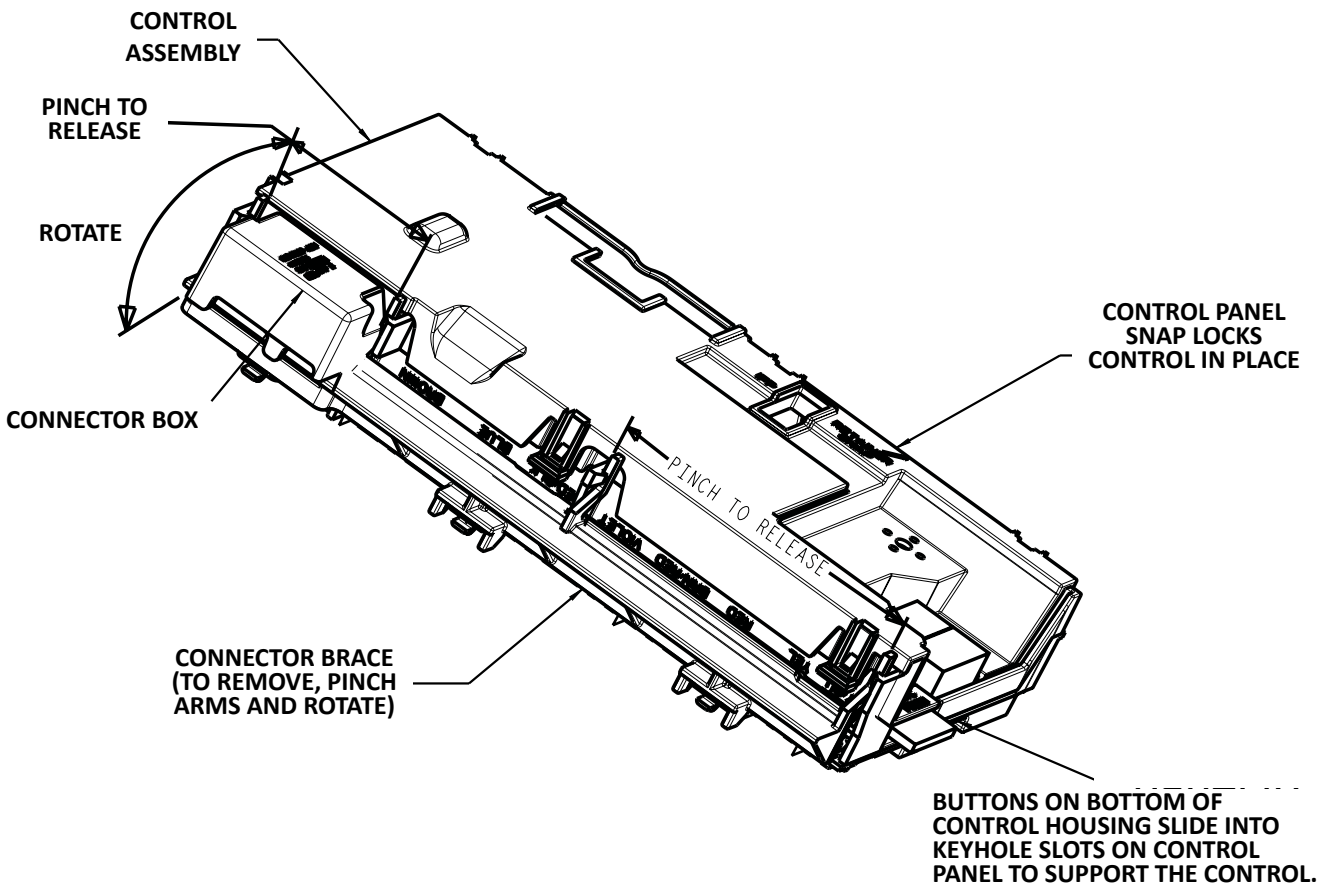

METER CHECK OF LOADS & SUPPLIES

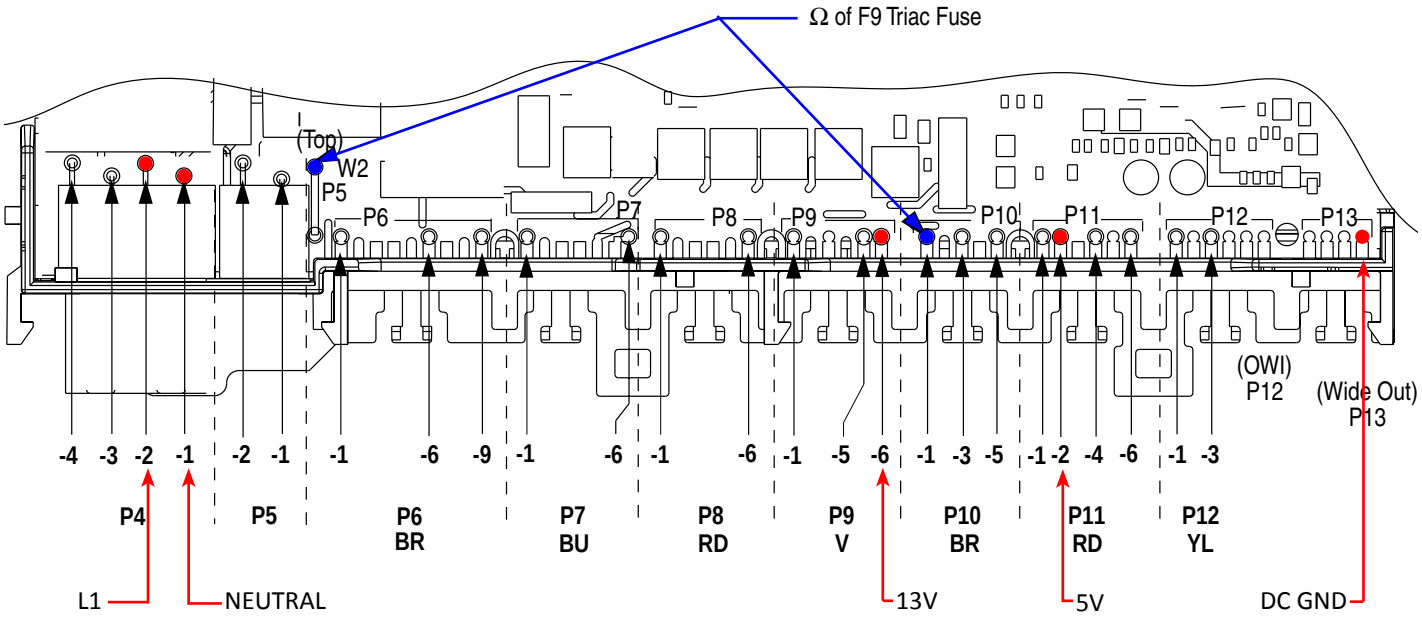

For Service Technician Use Only

⚠ DANGER

Electrical Shock Hazard

Only authorized technicians should perform diagnostic voltage measurements.

After performing voltage measurements, disconnect power before servicing.

Failure to follow these instructions can result in death or electrical shock.

General Theory of Operation

Refer to Wiring Diagram on page 6-3.

Neutral and L1 (AC voltage) enters the Control Board at P4, pins 1 & 2 respectively. AC is converted to DC voltage at the Low Volts Power Supply (LVPS). Supplies include 13 and 5 VDC, and DC GND (REF). These low voltage supplies are used to provide power to the microprocessors and board components, control the TRIACs, power the sensors, buzzer, fan motor, and energize the AC relays.

The 13 VDC is vital to the operation of the dishwasher. This supply is necessary to operate all 120 VAC loads in the dishwasher, whether they are connected to a relay or controlled by TRIACs. 13 VDC is generated by the power supply and flows through the door switch—when closed—to be available to the heater relays (L1 & N), wash motor relay, and the pilot relay. A relay coil becomes energized when the control closes the LV drive circuit for a specific relay completing 13V pathway, which in turn closes the relay switch providing AC to the load. The Pilot relay provides “L1” to the remainder of the components that are controlled by the Neutral-sensed TRIACs.

In the microfiltration dishwasher, there is one fuse on the Control Board: **F9 Small-TRIAC Load Fuse**. If the TRIAC Fuse is open, all loads controlled by TRIACs will not operate.

NOTE: Refer to “Fuse Service and Diagnostic Checks” on page 6-4.

Power Check

This test checks for incoming and outgoing power to and from the control board. This test assumes that proper voltages is present at the outlet or direct connect cable.

Test Procedure

1. Unplug dishwasher or disconnect power.
2. Remove access panel.
3. Remove terminal box cover.
4. With a voltmeter set to AC, insert black probe inside white wire screw nut (N) and insert red probe inside black wire screw nut (L1).
5. Plug in dishwasher or reconnect power.
   - ➢ If 120 VAC is present, unplug dishwasher or disconnect power and proceed to step 6.
   - ➢ If 120 VAC is not present, have customer correct power problem at outlet or breaker.
6. Remove the toe panel to access the control board.
7. Remove cover from control board and locate connector P4.
8. With a voltmeter set to AC, connect black probe to P4, pin 1 (N) and red probe to P4, pin 2 (L1).
9. Plug in dishwasher or reconnect power.
   - ➢ If 120 VAC is present, go to step 10.
   - ➢ If 120 VAC is not present, check for open connection between terminal block and control. Repair as needed.
10. Verify DC Supplies

- **5 VDC** is used to power IC’s and micro-processors on the circuit board as well as provide power to the sensors.
  - ➢ If **5 VDC** were missing, the OWI (Optical Water Indicator) would not function. To verify 5V ± 5%, with a voltmeter set to DC, connect the black lead to P13-4 (DC GND) and the red lead to P11-2 (5V).
- **13 VDC** is used to actuate the 120 VAC relays and TRIACs on the control, and the LEDs on models with interior lighting.
  - ➢ If **13 VDC** was missing, the heater, motors, and all other loads would not turn on as well as the LEDs on models with interior lighting. To verify 13V ± 5%, with a voltmeter set to DC, connect the black lead to P13-4 (DC GND) and the red lead to P9-6 (13V).

Troubleshooting Missing DC Supplies: Refer to the wiring diagram on page 6-3 when troubleshooting the DC supplies. If 5 VDC or 13 VDC is missing on the control, unplug dishwasher or disconnect power, and then disconnect all components/loads from the control relying on the missing or loaded supply. Plug in dishwasher or reconnect power and check if the DC supply has returned.

- ➢ If not, replace the control.
- ➢ If it has, turn off dishwasher and reconnect one connector at a time until the component loading down that supply has been identified.

11. Unplug dishwasher or disconnect power.
12. Reassemble all parts and panels.

For Service Technician Use Only

⚠ DANGER

Electrical Shock Hazard

Only authorized technicians should perform diagnostic voltage measurements.

After performing voltage measurements, disconnect power before servicing.

Failure to follow these instructions can result in death or electrical shock.

Door Switch Circuit

Perform the following checks if the dishwasher does not detect the door open or closed. This test will check the wiring to the door switch and the door switch itself. The following items are part of the door switch circuit.

- Harness/Connection
- Door Switch/Latch Assembly
- Control Board

Test Procedure

1. Check for improper installation of the dishwasher or leveling. Check door latch mechanism for obstructions or binding. Verify door seal is seated properly. Check for interference between dish racks and door. Repair as necessary.
2. Unplug dishwasher or disconnect power.
3. Remove outer door panel to access door latch and remove toe and access panels to access control board.
4. Check door switch contacts and all connections in the door switch circuit. Visually check that the P9 connector on the control and the door latch connector are securely installed.
   - ➢ If visual check passes, go to step 5.
   - ➢ If any of the connectors are not inserted properly, reconnect and retest door latch/switch.
5. Disconnect connector P9 from the control board.
6. Using an ohmmeter, measure across P9, pins 5 and 6 with the door closed, strike completely in latch mechanism (switch closed).
   - ➢ If 3 ohms or less is measured, proceed to step 7.
   - ➢ If high resistance is measured when door is closed, check for loose connections and repair as needed.
7. Using an ohmmeter, measure across P9, pins 5 and 6 with the door open, strike removed from latch mechanism (switch open).
   - ➢ If reading is infinite, go to step 8.
   - ➢ If reading shows continuity, or door switch is damaged, replace door switch and retest.
8. Set voltmeter to DC and connect red lead to test-pad P9-6 (13V) and black lead to P13-4 (DC GND) on the control board.
9. Plug in dishwasher or reconnect power and with door open, verify that 13 VDC is present across P9-6 and P13-4.
   - ➢ If 13 VDC is not present, replace the control and retest.
   - ➢ If 13 VDC is present, proceed to step 10.
10. Reconnect P9 to control board and perform Diagnostic Cycle to verify operation.
11. Unplug dishwasher or disconnect power.
12. Reassemble all parts and panels.
13. Plug in dishwasher or reconnect power.

Strip Circuit – Door Switch

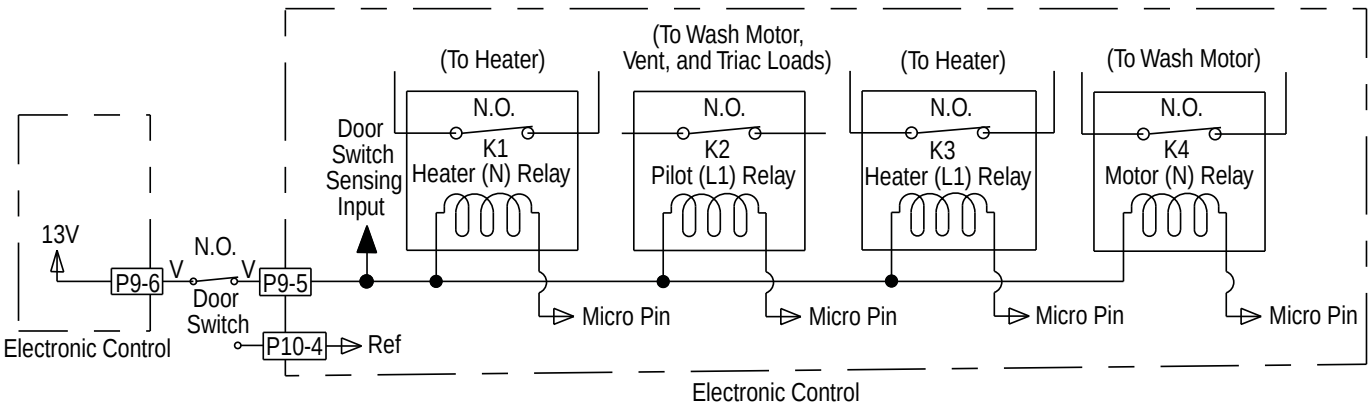

For Service Technician Use Only

⚠ DANGER

Electrical Shock Hazard

Only authorized technicians should perform diagnostic voltage measurements.

After performing voltage measurements, disconnect power before servicing.

Failure to follow these instructions can result in death or electrical shock.

Fill Circuit

This test will check the wiring and components in the fill circuit. The following items are part of the fill circuit.

- Harness/Connection
- Overfill Switch
- Fill Valve
- Control Board

Test Procedure

1. Verify water supply is turned on and supply line is adequate. Check for water siphoning out of the dishwasher (drain loop or improper drain connection). Check for debris in water line or fill valve inlet screen. Check for proper float switch operation. Repair as necessary.
2. Are all the loads controlled by TRIACs **not** working?
   - ➢ YES – check for open door switch, TRIAC fuse, or pilot relay.
   - ➢ NO – just the Fill Valve. Go to step 3.
3. Unplug dishwasher or disconnect power.
4. Remove toe and access panels to access control board.
5. Unplug connector P6 from control board.
6. Check the fill valve and harness—using an ohmmeter, measure the resistance between P6-7 and P6-9.
   - ➢ If the resistance is between 890-1090 ohms, the fill valve and harness are good. Go to step 7.
   - ➢ If outside the range, replace the fill valve.
   - ➢ If an open circuit is detected, check connections and harness continuity between control and fill valve. If good, replace the fill valve.
7. Check the float (overfill) switch—using an ohmmeter, measure the resistance between P6-4 and P6-6 with the float switch closed/float down (normal position).
   - ➢ If 3 ohms or less is measured, go to step 8.
   - ➢ If an open circuit or high resistance is measured, check connections and harness continuity between the control and float switch. If harness is good, replace switch and retest.
8. Using an ohmmeter; measure the resistance between P6-4 and P6-6 with the float switch open/float up.
   - ➢ If reading is infinite, go to step 9.
   - ➢ If 3 ohms or less is measured, or float/overfill switch is damaged, replace switch and retest.
9. Reconnect P6 to control board.
10. Set voltmeter to AC and connect leads to test-pads P10-1 & P6-9 on the control board. Plug in dishwasher or reconnect power.
11. Start the Diagnostic Cycle and at the proper interval measure for AC out of the control between test-pads P10-1 & P6-9. (Refer to the Fill Valve Strip Circuit below.)

    IMPORTANT: The Fill Valve must be connected to the control board to measure voltage accurately!!!
    - ➢ If no AC voltage is measured, replace the control board and retest.
    - ➢ If 120V AC is measured and fill valve is energized, go to step 12.
12. Unplug dishwasher or disconnect power.
13. Reassemble all parts and panels.
14. Plug in dishwasher or reconnect power and run Diagnostic Cycle to verify repair.

Strip Circuit – Fill Valve

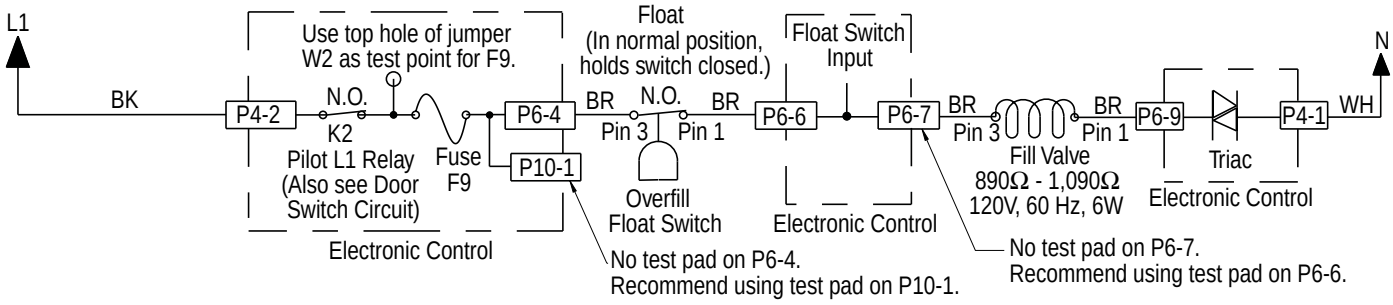

For Service Technician Use Only

⚠ DANGER

Electrical Shock Hazard

Only authorized technicians should perform diagnostic voltage measurements.

After performing voltage measurements, disconnect power before servicing.

Failure to follow these instructions can result in death or electrical shock.

Dispenser Circuit

This test will check the wiring to the dispenser and the dispenser solenoid or wax motor itself. The following items are part of the dispenser circuit.

- Harness/Connection
- Dispenser Solenoid/Wax Motor
- Control Board

Test Procedure

1. Check for obstructions or mechanical binding preventing the dispenser lid from opening. Repair or replace as necessary.
2. Are all the loads controlled by TRIACs **not** working?
   - ➢ YES – check for open door switch, TRIAC fuse, or pilot relay.
   - ➢ NO – just the Dispenser. Go to step 3.
3. Unplug dishwasher or disconnect power.
4. Remove outer door panel to access dispenser and remove toe and access panels to access control board.
5. Unplug connector P9 from control board.
6. Check the dispenser solenoid or wax motor (depending on model) and harness—using an ohmmeter, measure the resistance between P9-1 and P9-3.

   Solenoid:
   - ➢ If the resistance is between 260-300 ohms, the solenoid valve and harness are good. Go to step 7.
   - ➢ If outside the range, replace the dispenser solenoid.
   - ➢ If an open circuit is detected, check connections and harness continuity between control and dispenser. If good, replace the dispenser solenoid.

   Wax Motor:
   - ➢ If the resistance is between 1.4-2.8K ohms, the wax motor and harness are good. Go to step 7.
   - ➢ If outside the range, replace the dispenser wax motor.
   - ➢ If an open circuit is detected, check connections and harness continuity between control and dispenser. If good, replace the dispenser wax motor.
7. Reconnect P9 to control board.
8. Set voltmeter to AC and connect leads to test-pads P10-1 & P9-1 on the control board. Plug in dishwasher or reconnect power.
9. Start the Diagnostic Cycle and at the proper interval measure for AC out of the control between P10-1 to P9-1. (Refer to the Dispenser Strip Circuit below.)

   IMPORTANT: The Dispenser Solenoid or Wax Motor must be connected to the control board to measure voltage accurately!!!
   - ➢ If no AC voltage is measured, replace the control board and retest.
   - ➢ If 120 VAC is measured and dispenser motor/solenoid is energized, go to step 10.
10. Unplug dishwasher or disconnect power.
11. Reassemble all parts and panels.
12. Plug in dishwasher or reconnect power and run Diagnostic Cycle to verify repair.

Strip Circuit – Dispenser

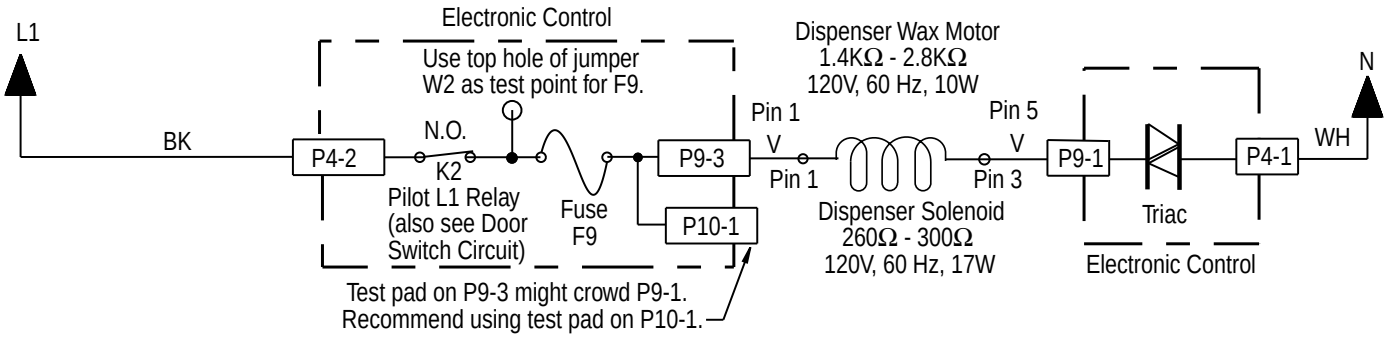

For Service Technician Use Only

⚠ DANGER

Electrical Shock Hazard

Only authorized technicians should perform diagnostic voltage measurements.

After performing voltage measurements, disconnect power before servicing.

Failure to follow these instructions can result in death or electrical shock.

Water Heating / Heat Dry

This test will check the wiring to the heater element, hi-limit thermostat and the heating circuit itself. The following items are part of the heater circuit.

- Harness/Connection
- Heater Coil
- Hi Limit Thermostat
- Control Board

Test Procedure

Control may be programmed to disable the heater if it detects a problem with the heating system. Run Diagnostics to clear the control and allow the heater to turn on again. If heating problem is not corrected, the control will disable the heater again.

1. Unplug dishwasher or disconnect power.
2. Remove toe and access panels to access control board.
3. Disconnect P4 from the control board.
4. Using an ohmmeter, measure resistance between P4, pins 3 and 4.
   - ➢ If the resistance is between 8-30 ohms, go to step 6.
   - ➢ If an open circuit is detected, go to step 5.
5. Visually check the wire connections between the control board, the heater element and the hi-limit thermostat. If the connections look good, check for continuity across the heater element and the hi-limit.
   - ➢ Replace heater element or hi-limit thermostat if it is electrically open.
   - ➢ Repair or replace wire harness if test fails continuity.
6. Reconnect P4 to control board.
7. Set voltmeter to AC and connect leads to test-pads P4-3 & P4-4 on the control board. Plug in dishwasher or reconnect power.
8. Start the Diagnostic Cycle and at the proper interval measure for AC out of the control between P4-3 and P4-4 using a voltmeter set to AC.
   - ➢ If 120 VAC is measured and heater element is on, go to step 9.
   - ➢ If no AC voltage is measured, replace control board.
9. Perform Diagnostic Cycle to verify repair.
   - ➢ If heater related error still exists, perform Water Sensing test procedure on following page.
10. Unplug dishwasher or disconnect power.
11. Reassemble all parts and panels.
12. Plug in dishwasher or reconnect power.

Strip Circuit – Heater Circuit

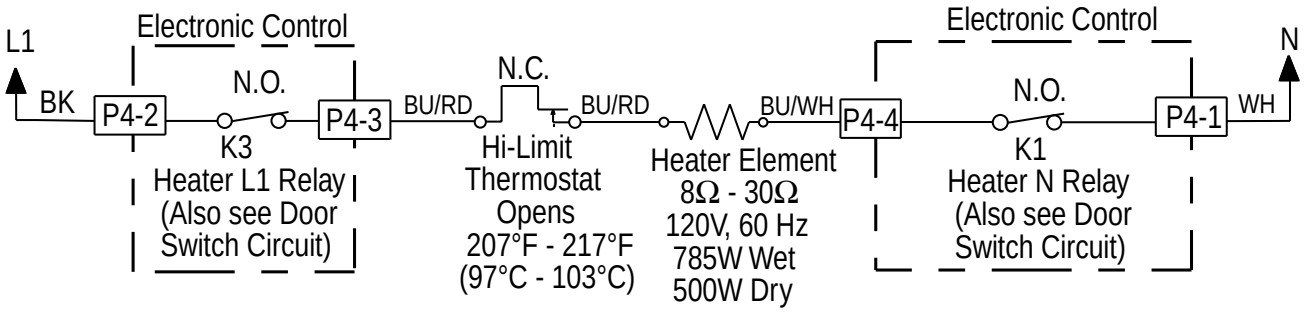

For Service Technician Use Only

⚠ DANGER

Electrical Shock Hazard

Only authorized technicians should perform diagnostic voltage measurements.

After performing voltage measurements, disconnect power before servicing.

Failure to follow these instructions can result in death or electrical shock.

Water Sensing with the OWI Sensor

This test will check the wiring to the OWI (Optical Water Indicator), which incorporates the temperature thermistor and the foam & turbidity sensor. The following items are part of the water sensing circuit.

- Harness/Connection
- OWI Sensor
- Control Board

Test Procedure

1. Check the operation of the OWI Sensor in the Service Diagnostic Cycle.
2. Unplug dishwasher or disconnect power.
3. Remove toe and access panels to access control board.
4. Disconnect P12 from the Control Board.
5. Using an ohmmeter, measure resistance between P12, pins 1 and 3. The following table provides approximate room and hot water temperatures and their associated resistance values.

TEMP °F (°C)	RES RANGE k ohms
77° F (25° C)	46 – 52k ohms
140° F (60° C)	11 – 13k ohms

NOTE: All thermistor resistance measurements must be made while dishwasher is unplugged or disconnected from power and connector P12 removed from control.

- ➢ If the thermistor resistance is OK , the thermistor is good. Go to step 6.
- ➢ If the thermistor resistance does not agree with the table, replace the OWI Sensor.
- ➢ If an open circuit is detected, check connections and harness continuity between control and OWI If good, replace the OWI Sensor.

6. Using an ohmmeter, check P12 -1 to cabinet ground and P12-3 to cabinet ground.
   - ➢ If no short is indicated, go to step 7.
   - ➢ If either pin indicates continuity to ground (short), repair or replace wiring harness and retest.
7. Reconnect P12 to control board.
8. Test for 5 VDC—With a voltmeter set to DC, connect the black lead to P12-2 and the red lead to P12-3.
9. Plug in dishwasher or reconnect power.
10. Start the Diagnostic Cycle and at the proper interval measure for 5 VDC out of the control between P12-2 and P12-3.
    - ➢ If 5 VDC is measured the control is functioning, go to step 11.
    - ➢ If no DC voltage is measured, replace the control board and retest.
11. Unplug dishwasher or disconnect power.
12. Reassemble all parts and panels.
13. Plug in dishwasher or reconnect power and run Diagnostic Cycle to verify repair.

Strip Circuit – Water Sensing

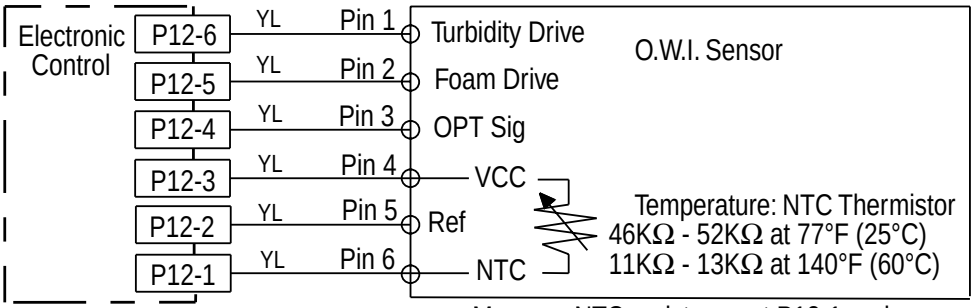

Measure NTC resistance at P12-1 and P12-3 connector disconnected from control.

For Service Technician Use Only

⚠ DANGER

Electrical Shock Hazard

Only authorized technicians should perform diagnostic voltage measurements.

After performing voltage measurements, disconnect power before servicing.

Failure to follow these instructions can result in death or electrical shock.

Diverter Motor

This test will check the wiring to the diverter motor and the diverter motor itself. The following items are part of the diverter motor circuit.

- Harness/Connection
- Diverter Motor
- Diverter Position Switch (see test on following page)
- Control Board

Test Procedure

1. Check for operation in Diagnostic Cycle. Listen for cam clicking as it rotates—or inspect shaft with mirror to see it rotating during diverter interval. If diverter is rotating, the likely problem is with the diverter sensor (see test procedure on following page). Verify that diverter disk is properly installed on shaft.
2. Are all the loads controlled by TRIACs **not** working?
   - ➢ YES – check for open door switch, TRIAC fuse, or pilot relay.
   - ➢ NO – just the diverter valve. Go to step 3.
3. Unplug dishwasher or disconnect power.
4. Remove toe and access panels to access control board.
5. Unplug connector P7 from control board.
6. Check the diverter motor—using an ohmmeter, measure the resistance between P7-4 and P7-6.
   - ➢ If the resistance is between 1300-1600 ohms, the diverter motor and harness are good. Go to step 7.
   - ➢ If outside the range, replace the diverter assembly.
   - ➢ If an open circuit is detected, check connections and harness continuity between control and diverter assembly. If good, replace the diverter assembly.
7. Reconnect P7 to control board.
8. Set voltmeter to AC and connect leads to test-pads P10-1 & P7-6 on the control board. Plug in dishwasher or reconnect power.
9. Start the Diagnostic Cycle and at the proper interval measure for AC out of the control between P10-1 & P7-6. (Refer to Diverter Motor Strip Circuit below.)

   IMPORTANT: The Diverter Motor must be connected to the control board to measure voltage accurately!!!
   - ➢ If no AC voltage is measured, replace the control board and retest.
   - ➢ If 120 VAC is measured and diverter is rotating, go to step 10.
10. Perform Diagnostic Cycle to verify repair.
    - ➢ If diverter error still exists, perform diverter sensor test procedure on following page.
11. Unplug dishwasher or disconnect power.
12. Reassemble all parts and panels.
13. Plug in dishwasher or reconnect power.

Strip Circuit – Diverter Motor

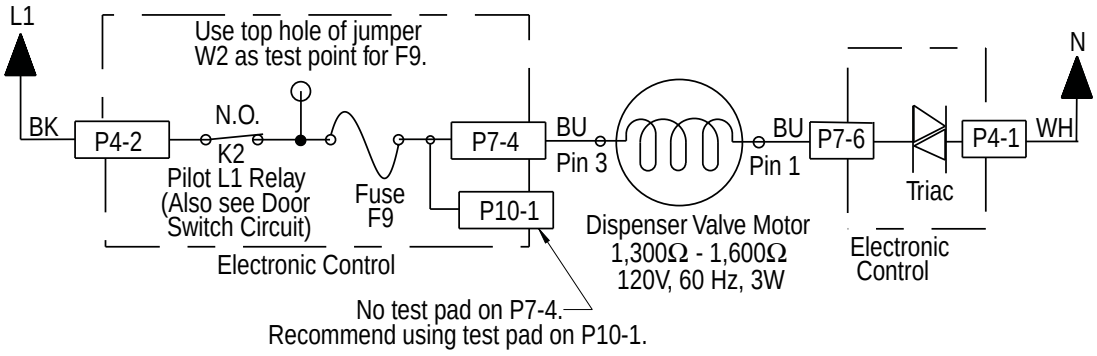

For Service Technician Use Only

⚠ DANGER

Electrical Shock Hazard

Only authorized technicians should perform diagnostic voltage measurements.

After performing voltage measurements, disconnect power before servicing.

Failure to follow these instructions can result in death or electrical shock.

Diverter Sensor/Position Switch

This test will check the wiring to the diverter sensor/position switch and the diverter assembly itself. The following items are part of the diverter sensor/switch circuit.

- Harness/Connection
- Diverter Motor (see test on previous page)
- Diverter Sensor/Position Switch
- Control Board

Test Procedure

1. Check the operation of the diverter motor in the Service Diagnostic Cycle. You should be able to "hear" the cam clicking as it rotates through the following wash zones.
   - ➢ Interval 22, the diverter motor is activated and water is 'diverted' to upper spray arm.
   - ➢ Intervals 18 & 17, the diverter motor will be on continuously.
   - ➢ Interval 14, the diverter motor is activated and water is 'diverted' to the Turbo Zone (some models only).
   - ➢ Interval 13, the diverter motor is activated and water is 'diverted' to lower spray arm.
2. If the diverter is diverting the flow of water to the wash zones, the diverter motor is working–continue to step 3. If not, perform the diverter motor test procedure on the preceding page.
3. Unplug dishwasher or disconnect power.
4. Remove toe and access panels to access control board.
5. Visually check that the diverter position switch connector and P11 connector on the control are securely installed.
   - ➢ If visual check passes, go to step 6.
   - ➢ If any of the connectors are not inserted properly, reconnect and retest diverter position switch.
6. Check continuity of harness between diverter position switch and P11 on control.
   - ➢ If continuity test is good, continue to step 7.
   - ➢ If continuity test fails, repair or replace harness as needed.
7. To test diverter switch, unplug connector P11 from control board and connect an ohmmeter across pins 3 and 4 (on the connector removed, not the control board).
8. Plug in dishwasher or reconnect power.
9. Run the service diagnostic cycle as stated in Step 1, and during the intervals listed, you should observe the diverter position switch closing momentarily and then reopening as it reaches each potential position.
   - ➢ If the switch is functioning normally (approximately 3 ohms or less when closed), proceed to step 10.
   - ➢ If switch does not open or close properly, or resistance is much greater 3 ohms when closed, then replace diverter assembly and retest.
10. If the preceding steps did not correct the diverter/position switch problem, replace the control board and retest.
11. Reassemble all parts and panels.
12. Plug in dishwasher or reconnect power and run Diagnostic Cycle to verify repair.

Strip Circuit – Diverter Switch

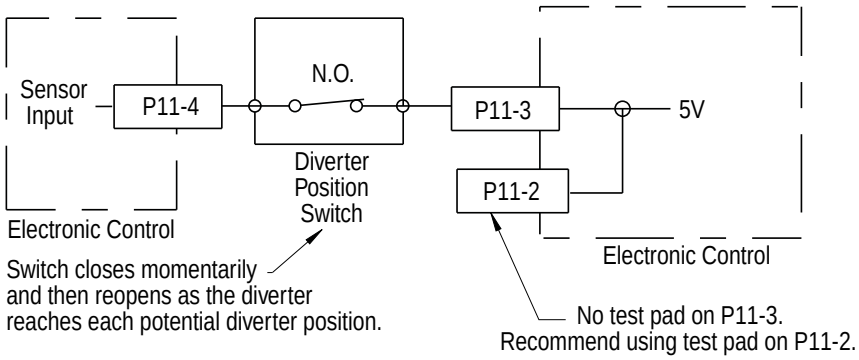

For Service Technician Use Only

⚠ DANGER

Electrical Shock Hazard

Only authorized technicians should perform diagnostic voltage measurements.

After performing voltage measurements, disconnect power before servicing.

Failure to follow these instructions can result in death or electrical shock.

Wash Motor

This test will check the wiring to the wash motor and the wash motor itself. The following items are part of the wash motor circuit.

- Harness/Connection
- Wash Motor & Capacitor
- Control Board

Test Procedure

1. Check the tub and sump for anything that may be impeding water flow. Inspect and if necessary clean the coarse-filter system. Also, inspect spray arm water nozzles and clean if needed.
2. Check the wash motor and electrical connections by performing the Service Diagnostic Cycle. The following steps assume that this step was unsuccessful.
3. Unplug dishwasher or disconnect power.
4. Remove toe and access panels to access control board.
5. Unplug connector P5 from control board.
6. Check the wash motor—using an ohmmeter, measure the resistance between P5-1 and P5-2.
   - ➢ If the resistance is between 10-15 ohms, the wash motor and harness are good. Go to step 7.
   - ➢ If outside the range, replace the wash motor.
   - ➢ If an open circuit is detected, check connections and harness continuity between control and wash motor. If good, replace the wash motor.
7. Reconnect P5 to control board.
8. Set voltmeter to AC and connect leads to test-pads P5-1 & P5-2 on the control board. Plug in dishwasher or reconnect power.
9. Start the Diagnostic Cycle and at the proper interval measure for AC out of the control between P5-1 & P5-2. (Refer to Wash Motor Strip Circuit below.)
   - ➢ If no AC voltage is measured, replace the control board and retest.
   - ➢ If 120 VAC is measured and wash motor is running, go to step 12.
   - ➢ If 120 VAC is measured and wash motor is not running, go to step 10.
10. Test the wash motor capacitor. **NOTE:** A faulty capacitor may cause the motor to "hum," not start, or start slowly.
    a. Discharge the capacitor by touching the leads of a 20,000 Ω resistor to the two terminals.
    b. Disconnect the wires from the capacitor terminals.
    c. With an ohmmeter, measure across the terminals and note reading.
    - ➢ If a steady increase in resistance is noted, capacitor is good. Replace wash motor assembly and retest.
    - ➢ If the capacitor is either shorted or open, replace capacitor. and retest.
11. If the preceding steps did not correct the wash motor problem, replace the control board.
12. Unplug dishwasher or disconnect power.
13. Reassemble all parts and panels.
14. Plug in dishwasher or reconnect power and run Diagnostic Cycle to verify repair.

Strip Circuit – Wash Motor

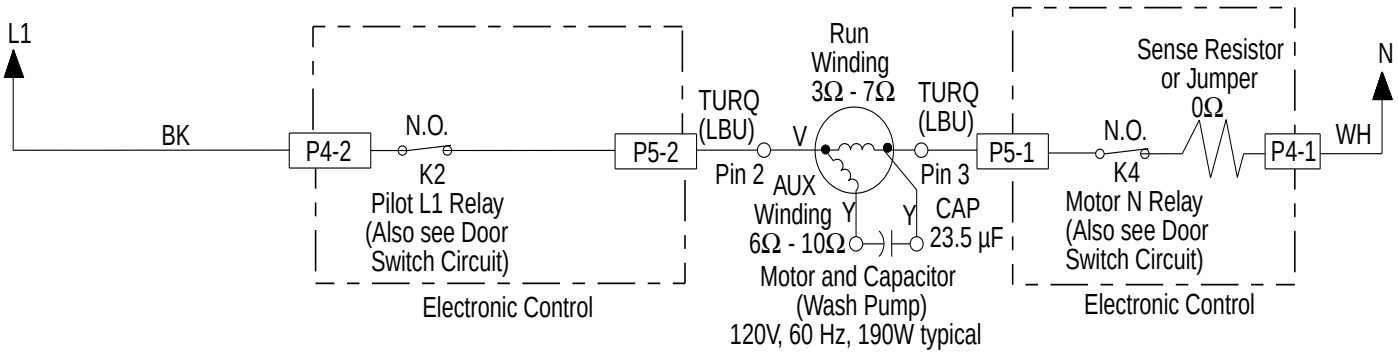

For Service Technician Use Only

⚠ DANGER

Electrical Shock Hazard

Only authorized technicians should perform diagnostic voltage measurements.

After performing voltage measurements, disconnect power before servicing.

Failure to follow these instructions can result in death or electrical shock.

Drain Motor

This test will check the wiring to the drain motor and the drain motor itself. The following items are part of the drain motor circuit.

- Harness/Connection
- Drain Motor
- Control Board

Test Procedure

1. Verify that drain hose or drain path is not obstructed. Check for blockage from sump check valve to customer's plumbing. Check for plugged garbage disposal or disposal plug not knocked out. Check drain loop, stuck check valve, or for plugged hoses. Repair as needed.
2. Check the drain motor and electrical connections by performing the Service Diagnostic Cycle. The following steps assume that this step was unsuccessful.
3. Are all the loads controlled by TRIACs **not** working?
   - ➢ YES – check for open door switch, TRIAC fuse, or pilot relay.
   - ➢ NO – just the drain motor. Go to step 4.
4. Unplug dishwasher or disconnect power.
5. Remove toe and access panels to access control board.
6. Unplug connector P6 from control board.
7. Check the drain motor—using an ohmmeter, measure the resistance between P6-1 and P6-3.
   - ➢ If the resistance is between 15-25 ohms, the drain motor and harness are good. Go to step 8.
   - ➢ If outside the range, replace the drain motor.
   - ➢ If an open circuit is detected, check connections and harness continuity between control and drain motor. If good, replace the drain motor.
8. Reconnect P6 to control board.
9. Set voltmeter to AC and connect leads to test-pads P10-1 & P6-1 on the control board. Plug in dishwasher or reconnect power.
10. Start the Diagnostic Cycle and at the proper interval measure for AC out of the control between P10-1 & P6-1. (Refer to Drain Motor Strip Circuit below.)

    IMPORTANT: The Drain Motor must be connected to the control board to measure voltage accurately!!!
    - ➢ If no AC voltage is measured, replace the control board and retest.
    - ➢ If 120 VAC is measured and drain motor is running, go to step 11.
11. Unplug dishwasher or disconnect power.
12. Reassemble all parts and panels.
13. Plug in dishwasher or reconnect power and run Diagnostic Cycle to verify repair.

Strip Circuit – Drain Motor

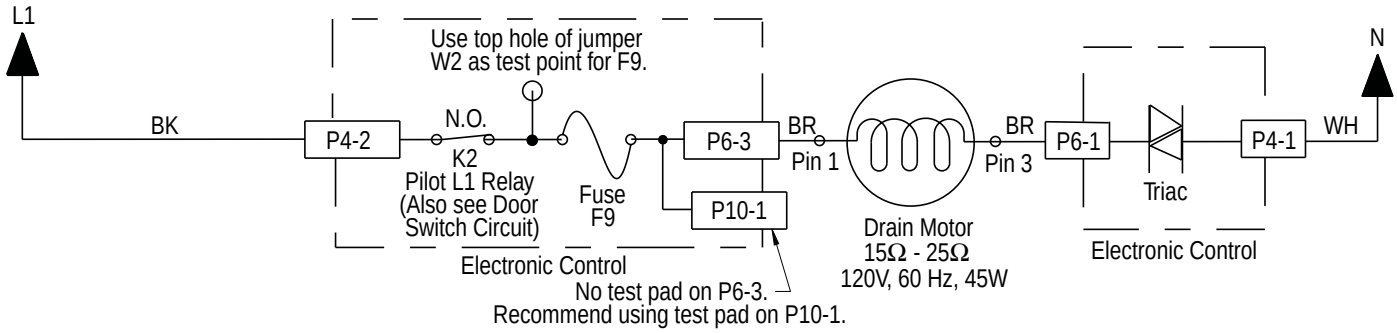

For Service Technician Use Only

⚠ DANGER

Electrical Shock Hazard

Only authorized technicians should perform diagnostic voltage measurements.

After performing voltage measurements, disconnect power before servicing.

Failure to follow these instructions can result in death or electrical shock.

Lower Spray Arm Motor

This test will check the wiring to the spray arm motor and the spray arm motor itself. The following items are part of the lower spray arm motor circuit.

- Harness/Connection
- Lower Spray Arm Motor
- Control Board

Test Procedure

1. Check for and remove anything blocking the lower spray arm (utensils, pot handles, etc). Verify that the filters are installed properly and not impeding spray arm rotation. Also, check for clogged spray nozzles and clean as needed.
2. Perform the Service Diagnostic Cycle to check the operation of the lower spray arm motor. The lower spray arm motor should be energized during Intervals 13, 12, and 11. The following steps assume that this step was unsuccessful.

   NOTE: If present, the CLEAN LED will turn on during the intervals listed above if the spray arm motor is working. A faulty lower spray arm motor will generate an error code F9E4.
3. Are all the loads controlled by TRIACs **not** working?
   - ➢ YES – check for open door switch, TRIAC fuse, or pilot relay.
   - ➢ NO – just the spray arm motor. Go to step 4.
4. Unplug dishwasher or disconnect power.
5. Remove toe and access panels to access control board.
6. Unplug connector P8 from control board.
7. Check the spray arm motor—using an ohmmeter, verify the resistance values as shown below.

Motor Harness	Windings (ohms)
P8, Pins 3 & 1 (CW)	1890-2310 ohms
P8, Pins 3 & 6 (CCW)	1890-2310 ohms

   - ➢ If the values are within the ranges listed, the spray arm motor and harness are good. Go to step 8.
   - ➢ If outside the range or inconsistent from winding to winding, replace the spray arm motor (diverter assembly).
   - ➢ If an open circuit is detected, check connections and harness continuity between control and spray arm motor. If good, replace the spray arm motor (diverter assembly).
8. Reconnect P8 to control board.
9. Set voltmeter to AC and connect leads to P8-1 & P8-3 on the control board. Plug in dishwasher or reconnect power.
10. Start the Diagnostic Cycle and during intervals 13, 12, and 11 check for AC out of the control between P8-1 & P8-3 (CW motor winding). **NOTE:** In this application, only the CW motor winding is used.

    IMPORTANT: The Lower Spray Arm Motor must be connected to the control board to measure voltage accurately!!!
    - ➢ If 120 VAC is measured during CW rotation, go to step 11.
    - ➢ If no AC voltage is measured, replace the control board and retest.
11. Unplug dishwasher or disconnect power.
12. Reassemble all parts and panels.
13. Plug in dishwasher or reconnect power and run Diagnostic Cycle to verify repair.

Strip Circuit – Lower Spray Arm Motor

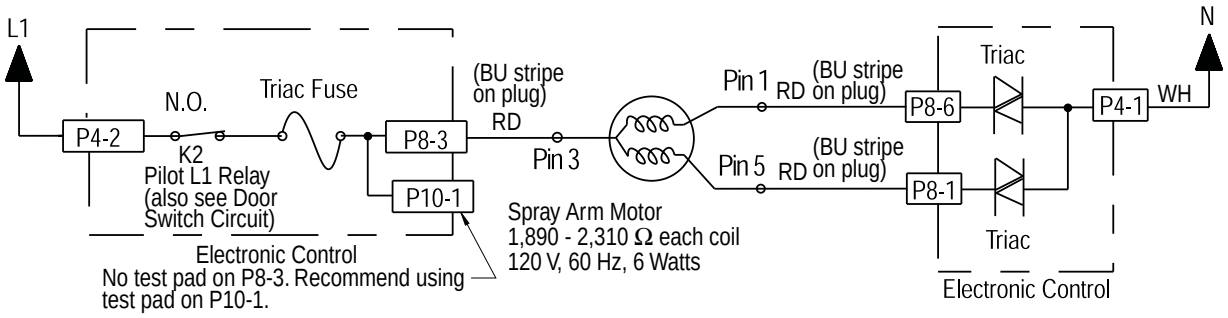

For Service Technician Use Only

⚠ DANGER

Electrical Shock Hazard

Only authorized technicians should perform diagnostic voltage measurements.

After performing voltage measurements, disconnect power before servicing.

Failure to follow these instructions can result in death or electrical shock.

AC Fan Motor

This test will check the wiring to the AC fan motor and the fan motor itself. The following items are part of the AC Fan Motor circuit.

- Harness/Connection
- AC Fan Motor
- Control Board

Test Procedure

1. Check for fan operation in the Diagnostic Cycle. The AC fan should be running during cycles 19, 16, 15, and 3.
2. Are all the loads controlled by TRIACs **not** working?
   - ➢ YES – check for open door switch, TRIAC fuse, or pilot relay.
   - ➢ NO – just the diverter valve. Go to step 3.
3. Unplug dishwasher or disconnect power.
4. Remove toe and access panels to access control board.
5. Unplug connector P7 from control board.
6. Check the fan motor—using an ohmmeter, measure the resistance between P7-1 and P7-3.
   - ➢ If the resistance is between 60-80 ohms, the fan motor and harness are good. Go to step 7.
   - ➢ If outside the range, replace the fan motor assembly.
   - ➢ If an open circuit is detected, check connections and harness continuity between control and fan motor. If good, replace the fan motor assembly.
7. Reconnect P7 to control board.
8. Set voltmeter to AC and connect leads to test-pads P10-1 & P7-1 on the control board. Plug in dishwasher or reconnect power.
9. Start the Diagnostic Cycle and at the proper interval measure for AC out of the control between P10-1 & P7-1. (Refer to AC Fan Motor Strip Circuit below.)

   IMPORTANT: The Fan Motor must be connected to the control board to measure voltage accurately!!!
   - ➢ If no AC voltage is measured, replace the control board and retest.
   - ➢ If 120 VAC is measured and the fan is spinning, go to step 10.
10. Unplug dishwasher or disconnect power.
11. Reassemble all parts and panels.
12. Plug in dishwasher or reconnect power and run Diagnostic Cycle to verify repair.

Strip Circuit – AC Fan Motor

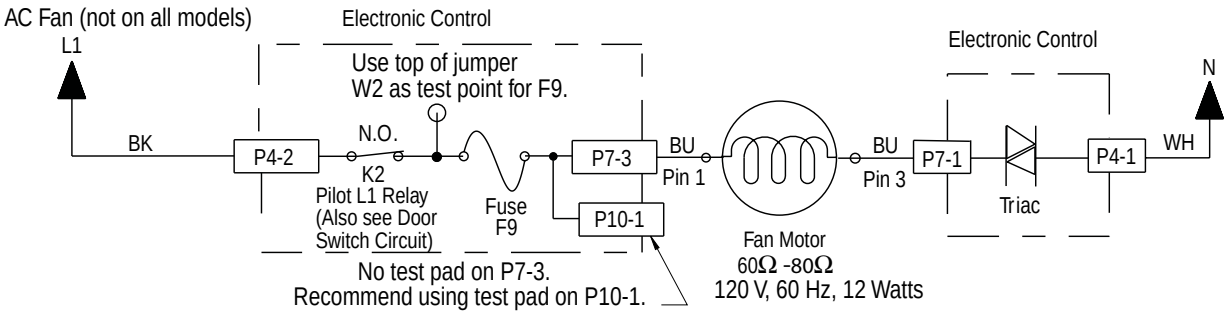

For Service Technician Use Only

⚠ DANGER

Electrical Shock Hazard

Only authorized technicians should perform diagnostic voltage measurements.

After performing voltage measurements, disconnect power before servicing.

Failure to follow these instructions can result in death or electrical shock.

Interior LED Lighting (some models)

This test will check the wiring to the LED tub lights and the lights themselves. The following items are part of the LED Tub Lights circuit.

- Harness/Connection
- LED Tub Lights (3)
- Control Board

NOTE: Under normal operation...

- The Interior LED Lighting is not on during the wash cycle.
- The Interior LED Lighting turns on when the wash cycle is complete and remains on for 15 minutes.
- The Interior LED Lighting turns on when the door is opened and remains on for 15 minutes.

Test Procedure

NOTE: The three (3) LED Tub Lights are wired in series. If one light malfunctions, the entire light circuit will not function.

1. Open door to dishwasher. The Interior LED Lights should turn on. The following steps assume that this step was unsuccessful.
2. Unplug dishwasher or disconnect power.
3. Remove toe and access panels to access control board.
4. Visually check that the P13 connector on the control is securely installed.
   - ➢ If visual passes, go to step 5.
   - ➢ If the connector is not inserted properly, reconnect and retest Interior LED Lighting.
5. Disconnect P13 from the Control Board.
6. Measure each LED light individually using the diode check setting on the multimeter. Meter should display a numeric reading from anode to cathode and “OL” reading from cathode to anode (refer to strip circuit below).
   - ➢ If LED check passes, go to step 7.
   - ➢ If any of the LEDs do not pass the check, replace the defective LED individually and retest Interior LED lighting.
7. Set voltmeter to DC and connect red lead to P13-1 and black lead to P13-4 on the control board. Plug in dishwasher or reconnect power.
8. Measure for 13 VDC between P13-1 & P13-4 with lights disconnected and door opened. Light output must be measured within 15 minutes of opening the door.
   - ➢ If 13 VDC is not present, replace the control and retest.
   - ➢ If 13 VDC is present, proceed to step 9.
9. Unplug dishwasher and disconnect power.
10. Reassemble all parts and panels.
11. Plug in dishwasher or reconnect power.

Strip Circuit – Interior LED Lighting

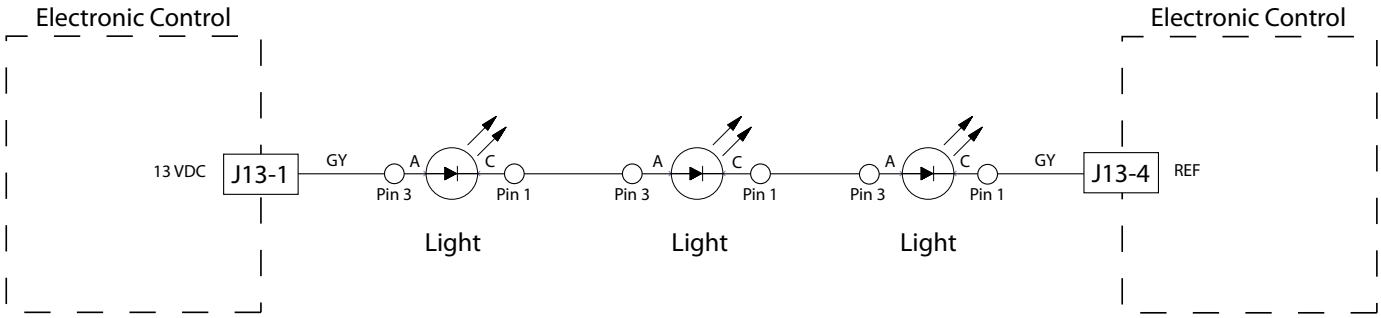

For Service Technician Use Only

⚠ DANGER

Electrical Shock Hazard

Only authorized technicians should perform diagnostic voltage measurements.

After performing voltage measurements, disconnect power before servicing.

Failure to follow these instructions can result in death or electrical shock.

User Interface (UI)

This test will check the wiring to the user interface and the user interface itself. The following items are part of the user interface circuit.

- Harness/Connection
- User Interface (UI)
- Status LED (On some models)
- Control Board

Test Procedure

1. Verify that the control lock-out feature has not been turned on by the customer. If unit will not run or power up, perform Power Check procedure on page 6-6. Also, check for excessive condensation on UI parts due to vent and/or fan problem.
2. Unplug dishwasher or disconnect power.
3. Remove toe and access panels to access control board.
4. Disconnect user interface connection from control board. Verify all other connections to the control are good.
5. Open dishwasher door.
6. Plug in dishwasher or reconnect power.
7. Wait at least 7 seconds for control to power-up completely.
8. Close dishwasher door and monitor control response:
   - ➢ If control is OK, it will respond by turning on the drain motor for 2 minutes. Replace user interface assembly.
   - ➢ If control is not OK, it will **not** turn on the drain motor. Wait for at least 10 seconds. If still no drain response, then replace control or LCD display module (whichever one the UI was connected to).
9. Unplug dishwasher or disconnect power.
10. Reassemble all parts and panels.
11. Plug in dishwasher or reconnect power.

Notes

PRODUCT SPECIFICATIONS & WARRANTY INFORMATION SOURCES

IN THE UNITED STATES:

FOR PRODUCT SPECIFICATIONS AND WARRANTY INFORMATION CALL:

FOR WHIRLPOOL PRODUCTS:	1-800-253-1301
FOR KITCHENAID PRODUCTS:	1-800-422-1230

FOR TECHNICAL ASSISTANCE WHILE AT THE CUSTOMER'S HOME CALL:

THE TECHNICAL ASSISTANCE LINE: 1-800-832-7174

HAVE YOUR STORE NUMBER READY TO IDENTIFY YOU AS AN AUTHORIZED IN-HOME SERVICE PROFESSIONAL

FOR LITERATURE ORDERS (CUSTOMER EXPERIENCE CENTER):

PHONE: 1-800-851-4605

FOR TECHNICAL INFORMATION AND SERVICE POINTERS:

www.servicematters.com

IN CANADA:

FOR PRODUCT SPECIFICATIONS AND WARRANTY INFORMATION CALL

1-800-461-5681

FOR TECHNICAL ASSISTANCE WHILE AT THE CUSTOMER'S HOME CALL:

THE TECHNICAL ASSISTANCE LINE: 1-800-488-4791

HAVE YOUR STORE NUMBER READY TO IDENTIFY YOU AS AN AUTHORIZED IN-HOME SERVICE PROFESSIONAL

KitchenAid 2015 Microfiltration Dishwashers with Advanced ProDry™

W10787848A